wwPDB X-ray Structure Validation Summary Report (i)

Feb 1, 2016 – 07:51 AM GMT

PDB ID	:	3CDA
Title	:	Thermodynamic and structure guided design of statin hmg-coa reductase inhibitors
Authors	:	Pavlovsky, A.; Sarver, R.W.; Harris, M.S.; Finzel, B.C.
Deposited on	:	2008-02-26
Resolution	:	2.07 Å(reported)

This is a wwPDB X-ray Structure Validation Summary Report for a publicly released PDB entry.
We welcome your comments at validation@mail.wwpdb.org
A user guide is available at
http://wwpdb.org/validation/2016/XrayValidationReportHelp
with specific help available everywhere you see the (i) symbol.

The following versions of software and data (see references (1)) were used in the production of this report:

MolProbity	:	4.02b-467
Mogul	:	1.7 (RC4), CSD as536be (2015)
Xtriage (Phenix)	:	1.9-1692
EDS	:	rb-20026688
Percentile statistics	:	20151230.v01 (using entries in the PDB archive December 30th 2015)
Refmac	:	5.8.0135
CCP4	:	6.5.0
Ideal geometry (proteins)	:	Engh & Huber (2001)
Ideal geometry (DNA, RNA)	:	Parkinson et al. (1996)
Validation Pipeline (wwPDB-VP)	:	trunk26865

1 Overall quality at a glance (i)

The following experimental techniques were used to determine the structure:
X-RAY DIFFRACTION

The reported resolution of this entry is 2.07 Å.

Percentile scores (ranging between 0-100) for global validation metrics of the entry are shown in the following graphic. The table shows the number of entries on which the scores are based.

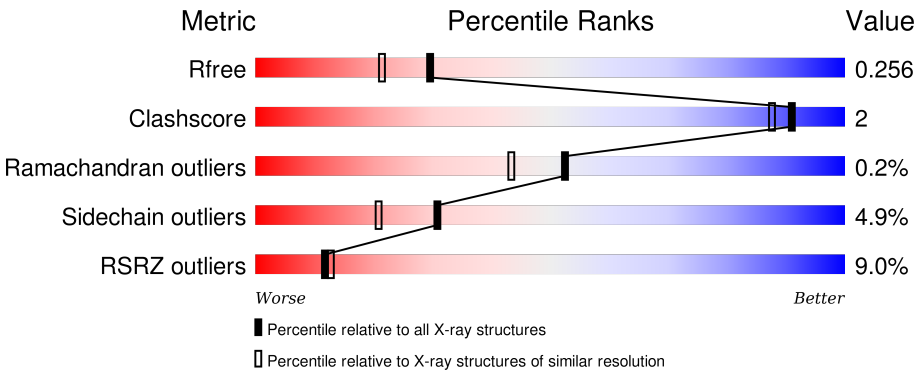

Metric	Whole archive (#Entries)	Similar resolution (#Entries, resolution range(Å))
R_{free}	91344	1799 (2.08-2.04)
Clashscore	102246	1910 (2.08-2.04)
Ramachandran outliers	100387	1893 (2.08-2.04)
Sidechain outliers	100360	1893 (2.08-2.04)
RSRZ outliers	91569	1802 (2.08-2.04)

The table below summarises the geometric issues observed across the polymeric chains and their fit to the electron density. The red, orange, yellow and green segments on the lower bar indicate the fraction of residues that contain outliers for >=3, 2, 1 and 0 types of geometric quality criteria. A grey segment represents the fraction of residues that are not modelled. The numeric value for each fraction is indicated below the corresponding segment, with a dot representing fractions <=5% The upper red bar (where present) indicates the fraction of residues that have poor fit to the electron density. The numeric value is given above the bar.

Mol	Chain	Length	Quality of chain
1	A	441	10% 81% 12% • •
1	B	441	4% 87% 8% 5%
1	C	441	11% 89% 5% 5%
1	D	441	9% 82% 7% 10%

2 Entry composition (i)

There are 3 unique types of molecules in this entry. The entry contains 12971 atoms, of which 0 are hydrogens and 0 are deuteriums.

In the tables below, the ZeroOcc column contains the number of atoms modelled with zero occupancy, the AltConf column contains the number of residues with at least one atom in alternate conformation and the Trace column contains the number of residues modelled with at most 2 atoms.

- Molecule 1 is a protein called 3-hydroxy-3-methylglutaryl-coenzyme A reductase.

Mol	Chain	Residues	Atoms					ZeroOcc	AltConf	Trace
			Total	C	N	O	S			
1	A	422	3141	1957	552	602	30	0	0	0
1	B	421	3133	1951	551	601	30	0	0	0
1	C	417	3096	1929	542	595	30	0	0	0
1	D	395	2928	1824	515	560	29	0	0	0

There are 28 discrepancies between the modelled and reference sequences:

Chain	Residue	Modelled	Actual	Comment	Reference
A	435	HIS	-	expression tag	UNP P04035
A	436	HIS	-	expression tag	UNP P04035
A	437	HIS	-	expression tag	UNP P04035
A	438	HIS	-	expression tag	UNP P04035
A	439	HIS	-	expression tag	UNP P04035
A	440	HIS	-	expression tag	UNP P04035
A	485	ILE	MET	engineered	UNP P04035
B	435	HIS	-	expression tag	UNP P04035
B	436	HIS	-	expression tag	UNP P04035
B	437	HIS	-	expression tag	UNP P04035
B	438	HIS	-	expression tag	UNP P04035
B	439	HIS	-	expression tag	UNP P04035
B	440	HIS	-	expression tag	UNP P04035
B	485	ILE	MET	engineered	UNP P04035
C	435	HIS	-	expression tag	UNP P04035
C	436	HIS	-	expression tag	UNP P04035
C	437	HIS	-	expression tag	UNP P04035
C	438	HIS	-	expression tag	UNP P04035
C	439	HIS	-	expression tag	UNP P04035
C	440	HIS	-	expression tag	UNP P04035
C	485	ILE	MET	engineered	UNP P04035

Continued on next page...

Continued from previous page...

Chain	Residue	Modelled	Actual	Comment	Reference
D	435	HIS	-	expression tag	UNP P04035
D	436	HIS	-	expression tag	UNP P04035
D	437	HIS	-	expression tag	UNP P04035
D	438	HIS	-	expression tag	UNP P04035
D	439	HIS	-	expression tag	UNP P04035
D	440	HIS	-	expression tag	UNP P04035
D	485	ILE	MET	engineered	UNP P04035

- Molecule 2 is (3R,5R)-7-{3-(4-FLUOROPHENYL)-1-(1-METHYLETHYL)-4-PHENYL-5-[(4-SULFAMOYLPHENYL)CARBAMOYL]-1H-PYRROL-2-YL}-3,5-DIHYDROXYHEPTANOIC ACID (three-letter code: 8HI) (formula: $C_{33}H_{36}FN_3O_7S$).

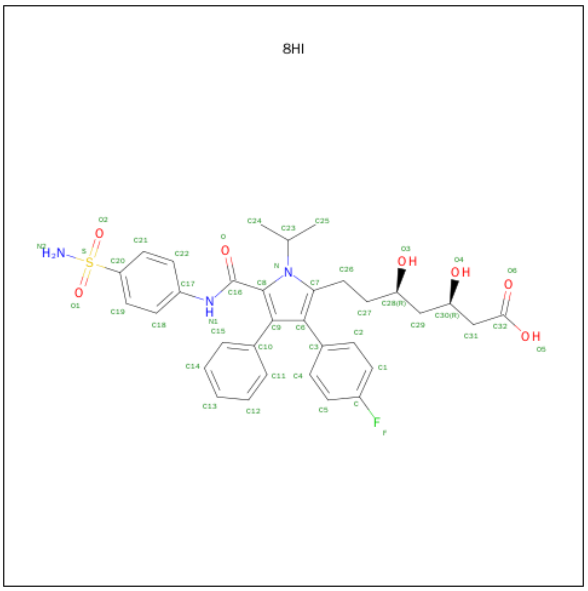

Mol	Chain	Residues	Atoms						ZeroOcc	AltConf
2	A	1	Total	C	F	N	O	S	0	0
			45	33	1	3	7	1		
2	B	1	Total	C	F	N	O	S	0	0
			45	33	1	3	7	1		
2	C	1	Total	C	F	N	O	S	0	0
			45	33	1	3	7	1		
2	D	1	Total	C	F	N	O	S	0	0
			45	33	1	3	7	1		

- Molecule 3 is water.

Mol	Chain	Residues	Atoms		ZeroOcc	AltConf
3	A	129	Total	O	0	0
			129	129		

Continued on next page...

Continued from previous page...

Mol	Chain	Residues	Atoms		ZeroOcc	AltConf
			Total	O		
3	B	134	134	134	0	0
			Total	O		
3	C	98	98	98	0	0
			Total	O		
3	D	132	132	132	0	0

3 Residue-property plots (i)

These plots are drawn for all protein, RNA and DNA chains in the entry. The first graphic for a chain summarises the proportions of errors displayed in the second graphic. The second graphic shows the sequence view annotated by issues in geometry and electron density. Residues are color-coded according to the number of geometric quality criteria for which they contain at least one outlier: green = 0, yellow = 1, orange = 2 and red = 3 or more. A red dot above a residue indicates a poor fit to the electron density (RSRZ > 2). Stretches of 2 or more consecutive residues without any outlier are shown as a green connector. Residues present in the sample, but not in the model, are shown in grey.

- Molecule 1: 3-hydroxy-3-methylglutaryl-coenzyme A reductase

Chain A:

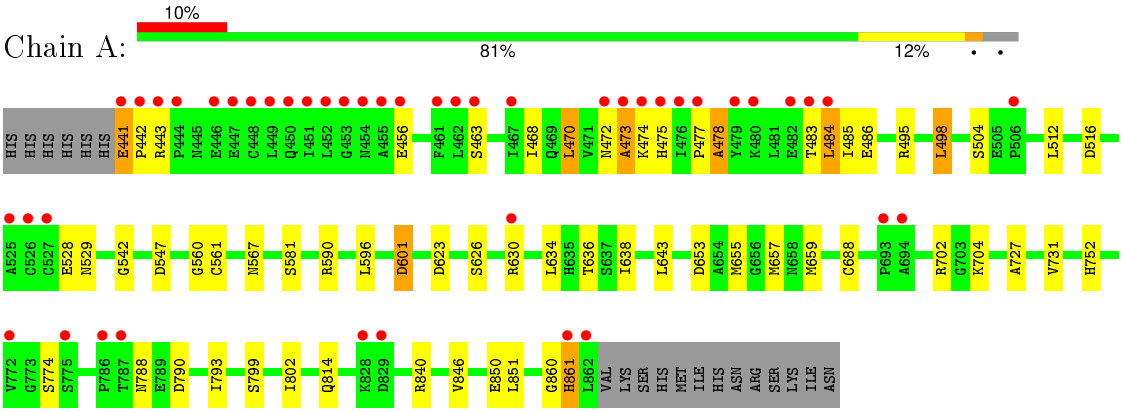

- Molecule 1: 3-hydroxy-3-methylglutaryl-coenzyme A reductase

Chain B:

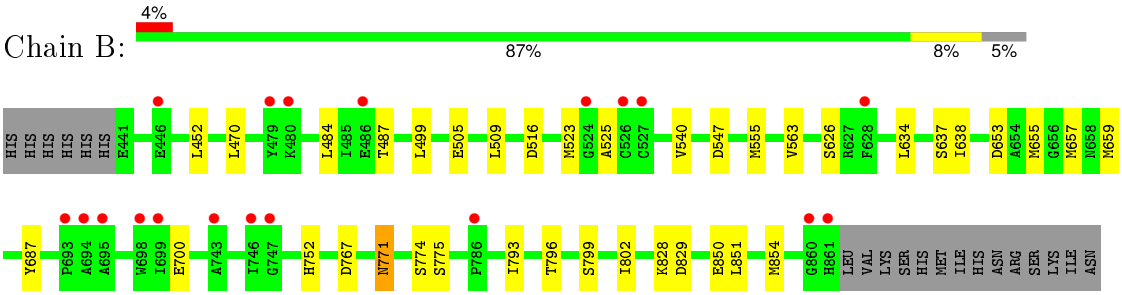

- Molecule 1: 3-hydroxy-3-methylglutaryl-coenzyme A reductase

Chain C:

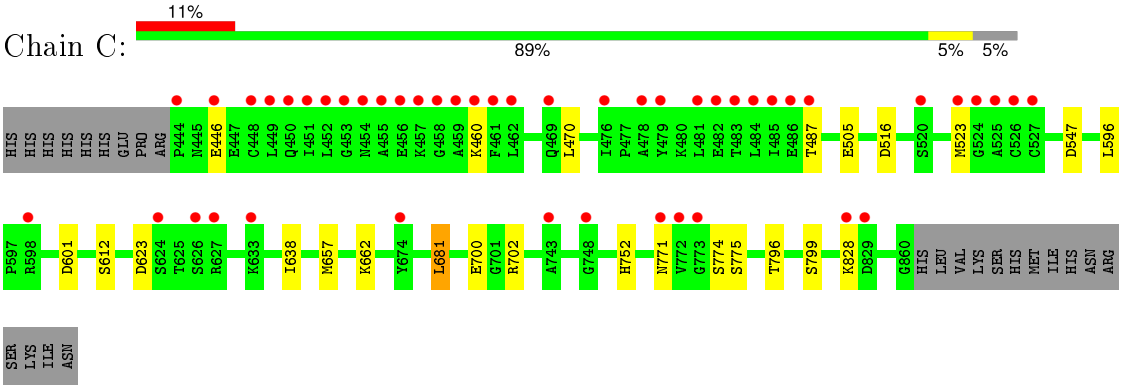

- Molecule 1: 3-hydroxy-3-methylglutaryl-coenzyme A reductase

Chain D:

9%
82%
7%
10%

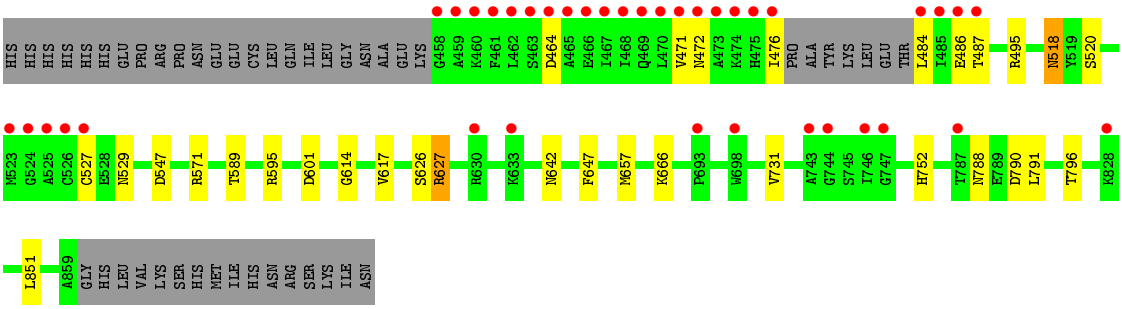
HIS HIS HIS HIS HIS GLU PRO ARG PRO ASN GLU GLU CYS LEU GLN ILE LEU GLY ASN ALA GLU LYS G458 A459 K460 F461 L462 S463 D464 A465 E466 I467 I468 Q469 L470 V471 N472 A473 K474 H475 I476 PRO ALA TYR LYS LEU GLU THR L484 I485 E486 T487 R495 N518 Y519 S520
M523 G524 A525 C526 C527 E528 N529 D547 R571 T589 R595 D601 G614 V617 S626 R627 R630 K633 N642 F647 M657 K666 P693 M698 V731 A743 G744 S745 I746 G747 H752 T787 N788 E789 D790 L791 T796 K828
L851 A859 GLY HIS LEU VAL LYS SER HIS MET ILE HIS ASN ARG SER LYS ILE ASN

4 Data and refinement statistics (i)

Property	Value	Source
Space group	P 1 21 1	Depositor
Cell constants a, b, c, α, β, γ	72.61Å 172.25Å 75.62Å 90.00° 118.04° 90.00°	Depositor
Resolution (Å)	50.00 – 2.07 43.53 – 2.07	Depositor EDS
% Data completeness (in resolution range)	90.5 (50.00-2.07) 90.5 (43.53-2.07)	Depositor EDS
R_{merge}	0.07	Depositor
R_{sym}	(Not available)	Depositor
$< I/\sigma(I) >$ [1]	3.78 (at 2.06Å)	Xtriage
Refinement program	REFMAC 5.1.24	Depositor
R, R_{free}	0.213 , 0.257 0.215 , 0.256	Depositor DCC
R_{free} test set	2065 reflections (2.34%)	DCC
Wilson B-factor (Å^2)	29.8	Xtriage
Anisotropy	0.862	Xtriage
Bulk solvent k_{sol}(e/Å^3), B_{sol}(Å^2)	0.36 , 37.7	EDS
Estimated twinning fraction	0.023 for h,-k,-h-l	Xtriage
L-test for twinning[2]	$< \|L\| > = 0.50$, $< L^2 > = 0.33$	Xtriage
Outliers	0 of 90192 reflections	Xtriage
F_o,F_c correlation	0.94	EDS
Total number of atoms	12971	wwPDB-VP
Average B, all atoms (Å^2)	37.0	wwPDB-VP

Xtriage's analysis on translational NCS is as follows: *The largest off-origin peak in the Patterson function is 3.82% of the height of the origin peak. No significant pseudotranslation is detected.*

[1] Intensities estimated from amplitudes.

[2] Theoretical values of $< |L| >$, $< L^2 >$ for acentric reflections are 0.5, 0.375 respectively for untwinned datasets, and 0.333, 0.2 for perfectly twinned datasets.

5 Model quality (i)

5.1 Standard geometry (i)

Bond lengths and bond angles in the following residue types are not validated in this section: 8HI

The Z score for a bond length (or angle) is the number of standard deviations the observed value is removed from the expected value. A bond length (or angle) with $|Z| > 5$ is considered an outlier worth inspection. RMSZ is the root-mean-square of all Z scores of the bond lengths (or angles).

Mol	Chain	Bond lengths		Bond angles	
		RMSZ	$\#\|Z\|>5$	RMSZ	$\#\|Z\|>5$
1	A	0.37	0/3187	0.64	6/4309 (0.1%)
1	B	0.36	0/3179	0.62	5/4298 (0.1%)
1	C	0.36	0/3140	0.61	4/4244 (0.1%)
1	D	0.37	0/2968	0.63	4/4010 (0.1%)
All	All	0.37	0/12474	0.63	19/16861 (0.1%)

There are no bond length outliers.

The worst 5 of 19 bond angle outliers are listed below:

Mol	Chain	Res	Type	Atoms	Z	Observed(^{o})	Ideal(^{o})
1	D	547	ASP	CB-CG-OD2	5.90	123.61	118.30
1	C	623	ASP	CB-CG-OD2	5.82	123.54	118.30
1	A	547	ASP	CB-CG-OD2	5.82	123.54	118.30
1	A	623	ASP	CB-CG-OD2	5.69	123.42	118.30
1	A	790	ASP	CB-CG-OD2	5.63	123.37	118.30

There are no chirality outliers.

There are no planarity outliers.

5.2 Too-close contacts (i)

In the following table, the Non-H and H(model) columns list the number of non-hydrogen atoms and hydrogen atoms in the chain respectively. The H(added) column lists the number of hydrogen atoms added and optimized by MolProbity. The Clashes column lists the number of clashes within the asymmetric unit, whereas Symm-Clashes lists symmetry related clashes.

Mol	Chain	Non-H	H(model)	H(added)	Clashes	Symm-Clashes
1	A	3141	0	3178	26	0
1	B	3133	0	3167	16	0

Continued on next page...

Continued from previous page...

Mol	Chain	Non-H	H(model)	H(added)	Clashes	Symm-Clashes
1	C	3096	0	3135	7	0
1	D	2928	0	2968	10	0
2	A	45	0	35	0	0
2	B	45	0	35	0	0
2	C	45	0	35	1	0
2	D	45	0	35	1	0
3	A	129	0	0	1	0
3	B	134	0	0	2	0
3	C	98	0	0	0	0
3	D	132	0	0	1	0
All	All	12971	0	12588	55	0

The all-atom clashscore is defined as the number of clashes found per 1000 atoms (including hydrogen atoms). The all-atom clashscore for this structure is 2.

The worst 5 of 55 close contacts within the same asymmetric unit are listed below, sorted by their clash magnitude.

Atom-1	Atom-2	Interatomic distance (Å)	Clash overlap (Å)
1:A:655:MET:SD	1:A:657:MET:HG2	2.14	0.87
1:C:771:ASN:OD1	1:C:775:SER:OG	1.96	0.83
1:B:775:SER:OG	3:B:993:HOH:O	2.02	0.76
1:B:771:ASN:HB2	3:B:993:HOH:O	1.92	0.69
1:B:655:MET:SD	1:B:657:MET:HG2	2.34	0.67

There are no symmetry-related clashes.

5.3 Torsion angles (i)

5.3.1 Protein backbone (i)

In the following table, the Percentiles column shows the percent Ramachandran outliers of the chain as a percentile score with respect to all X-ray entries followed by that with respect to entries of similar resolution.

The Analysed column shows the number of residues for which the backbone conformation was analysed, and the total number of residues.

Mol	Chain	Analysed	Favoured	Allowed	Outliers	Percentiles
1	A	420/441 (95%)	398 (95%)	19 (4%)	3 (1%)	26 14
1	B	419/441 (95%)	404 (96%)	14 (3%)	1 (0%)	52 43

Continued on next page...

Continued from previous page...

Mol	Chain	Analysed	Favoured	Allowed	Outliers	Percentiles	
1	C	415/441 (94%)	399 (96%)	16 (4%)	0	100	100
1	D	391/441 (89%)	376 (96%)	15 (4%)	0	100	100
All	All	1645/1764 (93%)	1577 (96%)	64 (4%)	4 (0%)	52	43

All (4) Ramachandran outliers are listed below:

Mol	Chain	Res	Type
1	A	473	ALA
1	A	478	ALA
1	A	484	LEU
1	B	525	ALA

5.3.2 Protein sidechains (i)

In the following table, the Percentiles column shows the percent sidechain outliers of the chain as a percentile score with respect to all X-ray entries followed by that with respect to entries of similar resolution.

The Analysed column shows the number of residues for which the sidechain conformation was analysed, and the total number of residues.

Mol	Chain	Analysed	Rotameric	Outliers	Percentiles	
1	A	336/355 (95%)	311 (93%)	25 (7%)	17	8
1	B	335/355 (94%)	323 (96%)	12 (4%)	42	34
1	C	331/355 (93%)	318 (96%)	13 (4%)	39	31
1	D	313/355 (88%)	298 (95%)	15 (5%)	31	22
All	All	1315/1420 (93%)	1250 (95%)	65 (5%)	31	21

5 of 65 residues with a non-rotameric sidechain are listed below:

Mol	Chain	Res	Type
1	B	505	GLU
1	B	828	LYS
1	D	666	LYS
1	B	523	MET
1	B	659	MET

Some sidechains can be flipped to improve hydrogen bonding and reduce clashes. 5 of 18 such sidechains are listed below:

Mol	Chain	Res	Type
1	B	819	GLN
1	B	830	ASN
1	D	632	GLN
1	B	472	ASN
1	B	510	GLN

5.3.3 RNA (i)

There are no RNA molecules in this entry.

5.4 Non-standard residues in protein, DNA, RNA chains (i)

There are no non-standard protein/DNA/RNA residues in this entry.

5.5 Carbohydrates (i)

There are no carbohydrates in this entry.

5.6 Ligand geometry (i)

4 ligands are modelled in this entry.

In the following table, the Counts columns list the number of bonds (or angles) for which Mogul statistics could be retrieved, the number of bonds (or angles) that are observed in the model and the number of bonds (or angles) that are defined in the chemical component dictionary. The Link column lists molecule types, if any, to which the group is linked. The Z score for a bond length (or angle) is the number of standard deviations the observed value is removed from the expected value. A bond length (or angle) with $|Z| > 2$ is considered an outlier worth inspection. RMSZ is the root-mean-square of all Z scores of the bond lengths (or angles).

Mol	Type	Chain	Res	Link	Bond lengths			Bond angles		
					Counts	RMSZ	$\#\|Z\| > 2$	Counts	RMSZ	$\#\|Z\| > 2$
2	8HI	A	2	-	42,48,48	1.86	3 (7%)	58,69,69	1.56	7 (12%)
2	8HI	B	1	-	42,48,48	1.77	3 (7%)	58,69,69	1.73	8 (13%)
2	8HI	C	4	-	42,48,48	1.81	3 (7%)	58,69,69	1.52	6 (10%)
2	8HI	D	3	-	42,48,48	1.78	3 (7%)	58,69,69	1.43	6 (10%)

In the following table, the Chirals column lists the number of chiral outliers, the number of chiral centers analysed, the number of these observed in the model and the number defined in the chemical component dictionary. Similar counts are reported in the Torsion and Rings columns. '-' means no outliers of that kind were identified.

Mol	Type	Chain	Res	Link	Chirals	Torsions	Rings
2	8HI	A	2	-	-	0/33/39/39	0/4/4/4
2	8HI	B	1	-	-	0/33/39/39	0/4/4/4
2	8HI	C	4	-	-	0/33/39/39	0/4/4/4
2	8HI	D	3	-	-	0/33/39/39	0/4/4/4

The worst 5 of 12 bond length outliers are listed below:

Mol	Chain	Res	Type	Atoms	Z	Observed(Å)	Ideal(Å)
2	A	2	8HI	C20-S	-10.81	1.60	1.77
2	C	4	8HI	C20-S	-10.61	1.61	1.77
2	D	3	8HI	C20-S	-10.22	1.61	1.77
2	B	1	8HI	C20-S	-10.15	1.61	1.77
2	D	3	8HI	C17-N1	-2.68	1.36	1.41

The worst 5 of 27 bond angle outliers are listed below:

Mol	Chain	Res	Type	Atoms	Z	Observed(^{o})	Ideal(^{o})
2	B	1	8HI	O1-S-O2	-8.28	107.16	118.80
2	C	4	8HI	O1-S-O2	-7.11	108.81	118.80
2	A	2	8HI	O1-S-O2	-6.56	109.59	118.80
2	D	3	8HI	O1-S-O2	-6.16	110.15	118.80
2	C	4	8HI	C26-C7-C6	-2.75	125.77	130.41

There are no chirality outliers.

There are no torsion outliers.

There are no ring outliers.

2 monomers are involved in 2 short contacts:

Mol	Chain	Res	Type	Clashes	Symm-Clashes
2	C	4	8HI	1	0
2	D	3	8HI	1	0

5.7 Other polymers (i)

There are no such residues in this entry.

5.8 Polymer linkage issues (i)

There are no chain breaks in this entry.

6 Fit of model and data (i)

6.1 Protein, DNA and RNA chains (i)

In the following table, the column labelled '#RSRZ> 2' contains the number (and percentage) of RSRZ outliers, followed by percent RSRZ outliers for the chain as percentile scores relative to all X-ray entries and entries of similar resolution. The OWAB column contains the minimum, median, 95th percentile and maximum values of the occupancy-weighted average B-factor per residue. The column labelled 'Q< 0.9' lists the number of (and percentage) of residues with an average occupancy less than 0.9.

Mol	Chain	Analysed	<RSRZ>	#RSRZ>2			OWAB(Å^2)	Q<0.9
1	A	422/441 (95%)	0.46	45 (10%)	8	8	24, 35, 56, 63	0
1	B	421/441 (95%)	0.29	19 (4%)	37	41	25, 35, 48, 57	0
1	C	417/441 (94%)	0.61	47 (11%)	7	7	23, 36, 59, 65	0
1	D	395/441 (89%)	0.55	38 (9%)	10	11	24, 35, 59, 64	0
All	All	1655/1764 (93%)	0.48	149 (9%)	12	13	23, 35, 56, 65	0

The worst 5 of 149 RSRZ outliers are listed below:

Mol	Chain	Res	Type	RSRZ
1	D	527	CYS	13.5
1	D	461	PHE	10.4
1	C	455	ALA	9.5
1	B	861	HIS	8.8
1	C	461	PHE	8.5

6.2 Non-standard residues in protein, DNA, RNA chains (i)

There are no non-standard protein/DNA/RNA residues in this entry.

6.3 Carbohydrates (i)

There are no carbohydrates in this entry.

6.4 Ligands (i)

In the following table, the Atoms column lists the number of modelled atoms in the group and the number defined in the chemical component dictionary. LLDF column lists the quality of electron density of the group with respect to its neighbouring residues in protein, DNA or RNA chains. The B-factors column lists the minimum, median, 95th percentile and maximum values of B factors

of atoms in the group. The column labelled 'Q< 0.9' lists the number of atoms with occupancy less than 0.9.

Mol	Type	Chain	Res	Atoms	RSCC	RSR	LLDF	B-factors(Å^2)	Q<0.9
2	8HI	D	3	45/45	0.93	0.12	-0.32	25,32,34,36	0
2	8HI	A	2	45/45	0.93	0.12	-0.35	26,30,35,36	0
2	8HI	B	1	45/45	0.94	0.12	-0.42	27,34,37,38	0
2	8HI	C	4	45/45	0.93	0.11	-0.64	28,31,36,37	0

6.5 Other polymers (i)

There are no such residues in this entry.