wwPDB X-ray Structure Validation Summary Report (i)

Feb 1, 2016 – 01:58 AM GMT

PDB ID	:	2F2C
Title	:	X-ray structure of human CDK6-Vcyclinwith the inhibitor aminopurvalanol
Authors	:	Schulze-Gahmen, U; Lu, H.
Deposited on	:	2005-11-16
Resolution	:	2.80 Å(reported)

This is a wwPDB X-ray Structure Validation Summary Report for a publicly released PDB entry.
We welcome your comments at validation@mail.wwpdb.org
A user guide is available at
http://wwpdb.org/validation/2016/XrayValidationReportHelp
with specific help available everywhere you see the (i) symbol.

The following versions of software and data (see references (1)) were used in the production of this report:

MolProbity	:	4.02b-467
Mogul	:	1.7 (RC4), CSD as536be (2015)
Xtriage (Phenix)	:	1.9-1692
EDS	:	rb-20026688
Percentile statistics	:	20151230.v01 (using entries in the PDB archive December 30th 2015)
Refmac	:	5.8.0135
CCP4	:	6.5.0
Ideal geometry (proteins)	:	Engh & Huber (2001)
Ideal geometry (DNA, RNA)	:	Parkinson et al. (1996)
Validation Pipeline (wwPDB-VP)	:	trunk26865

1 Overall quality at a glance (i)

The following experimental techniques were used to determine the structure:
X-RAY DIFFRACTION

The reported resolution of this entry is 2.80 Å.

Percentile scores (ranging between 0-100) for global validation metrics of the entry are shown in the following graphic. The table shows the number of entries on which the scores are based.

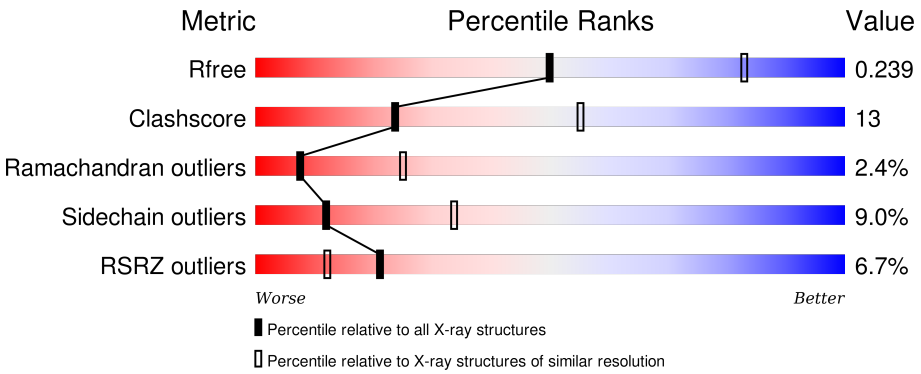

Metric	Whole archive (#Entries)	Similar resolution (#Entries, resolution range(Å))
R_{free}	91344	2393 (2.80-2.80)
Clashscore	102246	2827 (2.80-2.80)
Ramachandran outliers	100387	2782 (2.80-2.80)
Sidechain outliers	100360	2784 (2.80-2.80)
RSRZ outliers	91569	2404 (2.80-2.80)

The table below summarises the geometric issues observed across the polymeric chains and their fit to the electron density. The red, orange, yellow and green segments on the lower bar indicate the fraction of residues that contain outliers for >=3, 2, 1 and 0 types of geometric quality criteria. A grey segment represents the fraction of residues that are not modelled. The numeric value for each fraction is indicated below the corresponding segment, with a dot representing fractions <=5% The upper red bar (where present) indicates the fraction of residues that have poor fit to the electron density. The numeric value is given above the bar.

Mol	Chain	Length	Quality of chain
1	A	254	% 69% 24% • •
2	B	308	10% 61% 24% 6% 9%

The following table lists non-polymeric compounds, carbohydrate monomers and non-standard residues in protein, DNA, RNA chains that are outliers for geometric or electron-density-fit criteria:

Mol	Type	Chain	Res	Chirality	Geometry	Clashes	Electron density
3	SO4	B	402	-	-	X	-

2 Entry composition (i)

There are 5 unique types of molecules in this entry. The entry contains 4059 atoms, of which 0 are hydrogens and 0 are deuteriums.

In the tables below, the ZeroOcc column contains the number of atoms modelled with zero occupancy, the AltConf column contains the number of residues with at least one atom in alternate conformation and the Trace column contains the number of residues modelled with at most 2 atoms.

- Molecule 1 is a protein called Cyclin homolog.

Mol	Chain	Residues	Atoms					ZeroOcc	AltConf	Trace
			Total	C	N	O	S			
1	A	244	1903	1228	306	358	11	0	0	0

- Molecule 2 is a protein called Cell division protein kinase 6.

Mol	Chain	Residues	Atoms					ZeroOcc	AltConf	Trace
			Total	C	N	O	S			
2	B	280	2119	1370	351	391	7	0	0	0

- Molecule 3 is SULFATE ION (three-letter code: SO4) (formula: O_4S).

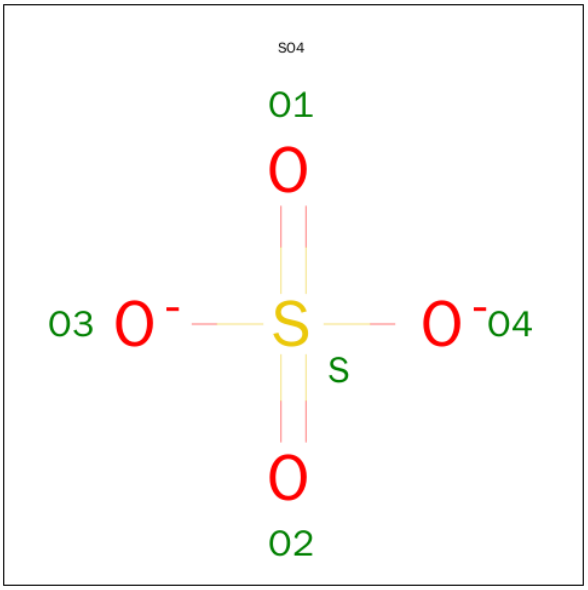

Mol	Chain	Residues	Atoms			ZeroOcc	AltConf
			Total	O	S		
3	B	1	5	4	1	0	0

- Molecule 4 is (2S)-2-({6-[(3-AMINO-5-CHLOROPHENYL)AMINO]-9-ISOPROPYL-9 H-PURIN-2-YL}AMINO)-3-METHYLBUTAN-1-OL (three-letter code: AP9) (formula:

$C_{19}H_{26}ClN_7O$).

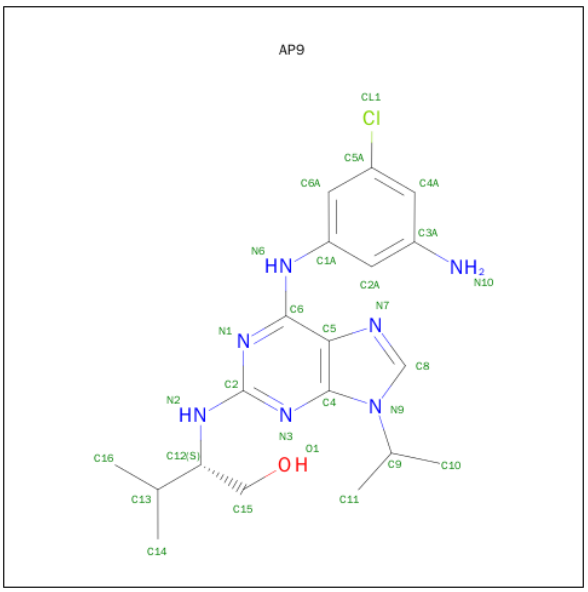

Mol	Chain	Residues	Atoms					ZeroOcc	AltConf
			Total	C	Cl	N	O		
4	B	1	28	19	1	7	1	0	0

- Molecule 5 is DIMETHYL SULFOXIDE (three-letter code: DMS) (formula: C_2H_6OS).

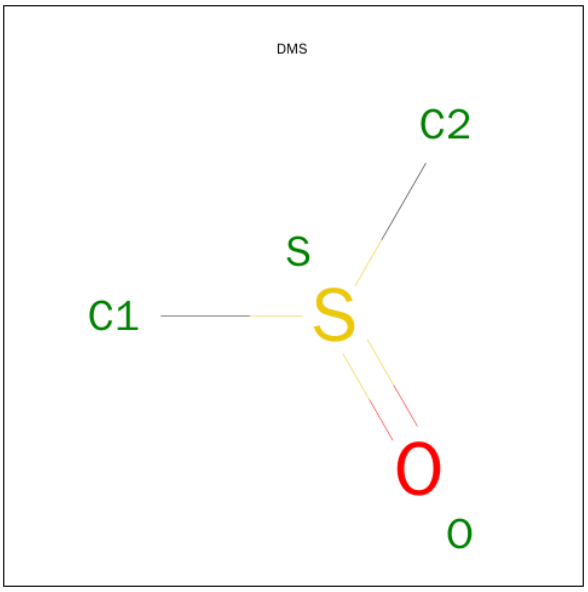

Mol	Chain	Residues	Atoms				ZeroOcc	AltConf
			Total	C	O	S		
5	B	1	4	2	1	1	0	0

3 Residue-property plots (i)

These plots are drawn for all protein, RNA and DNA chains in the entry. The first graphic for a chain summarises the proportions of errors displayed in the second graphic. The second graphic shows the sequence view annotated by issues in geometry and electron density. Residues are color-coded according to the number of geometric quality criteria for which they contain at least one outlier: green = 0, yellow = 1, orange = 2 and red = 3 or more. A red dot above a residue indicates a poor fit to the electron density (RSRZ > 2). Stretches of 2 or more consecutive residues without any outlier are shown as a green connector. Residues present in the sample, but not in the model, are shown in grey.

- Molecule 1: Cyclin homolog

Chain A:

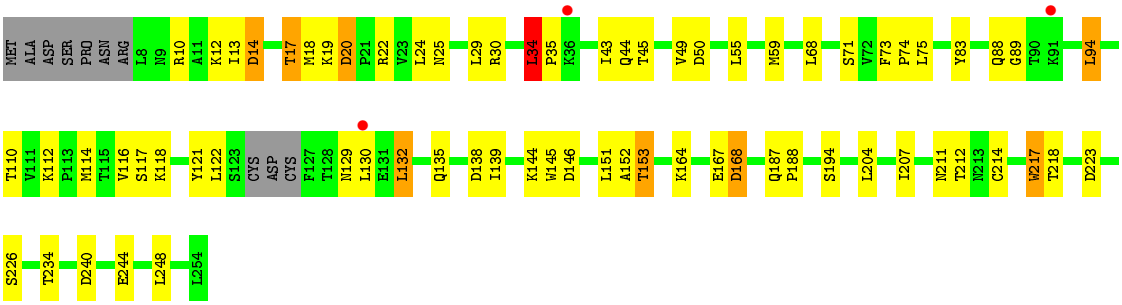

- Molecule 2: Cell division protein kinase 6

Chain B:

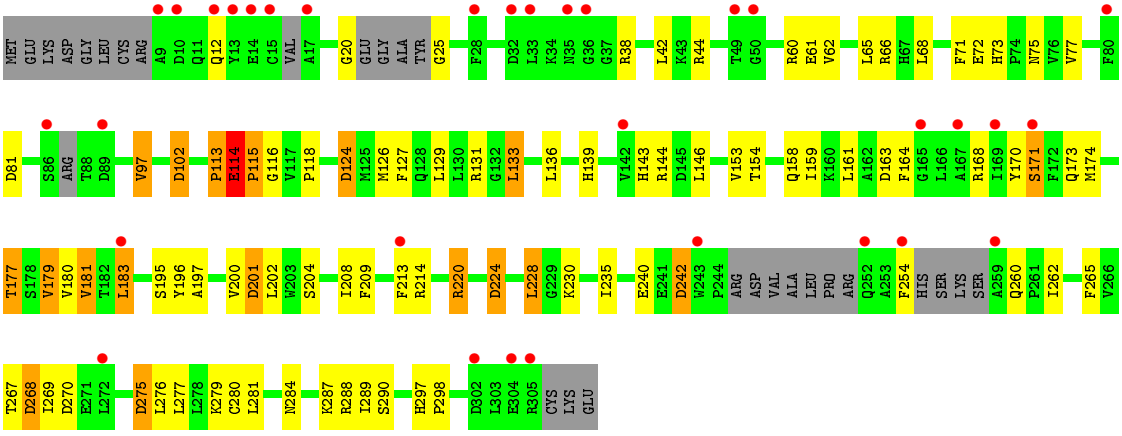

4 Data and refinement statistics (i)

Property	Value	Source
Space group	P 65 2 2	Depositor
Cell constants a, b, c, α, β, γ	71.52Å 71.52Å 449.30Å 90.00° 90.00° 120.00°	Depositor
Resolution (Å)	20.00 – 2.80 36.37 – 2.79	Depositor EDS
% Data completeness (in resolution range)	96.9 (20.00-2.80) 96.8 (36.37-2.79)	Depositor EDS
R_{merge}	(Not available)	Depositor
R_{sym}	0.09	Depositor
$< I/\sigma(I) >$ [1]	2.61 (at 2.77Å)	Xtriage
Refinement program	REFMAC 5.2.0003	Depositor
R, R_{free}	0.238 , 0.301 0.237 , 0.239	Depositor DCC
R_{free} test set	890 reflections (5.39%)	DCC
Wilson B-factor (Å^2)	87.0	Xtriage
Anisotropy	0.212	Xtriage
Bulk solvent k_{sol}(e/Å^3), B_{sol}(Å^2)	0.34 , 97.5	EDS
Estimated twinning fraction	No twinning to report.	Xtriage
L-test for twinning[2]	$< \|L\| > = 0.45$, $< L^2 > = 0.28$	Xtriage
Outliers	0 of 17699 reflections	Xtriage
F_o,F_c correlation	0.92	EDS
Total number of atoms	4059	wwPDB-VP
Average B, all atoms (Å^2)	73.0	wwPDB-VP

Xtriage's analysis on translational NCS is as follows: *The largest off-origin peak in the Patterson function is 3.52% of the height of the origin peak. No significant pseudotranslation is detected.*

[1] Intensities estimated from amplitudes.

[2] Theoretical values of $< |L| >$, $< L^2 >$ for acentric reflections are 0.5, 0.375 respectively for untwinned datasets, and 0.333, 0.2 for perfectly twinned datasets.

5 Model quality (i)

5.1 Standard geometry (i)

Bond lengths and bond angles in the following residue types are not validated in this section: AP9, DMS, SO4

The Z score for a bond length (or angle) is the number of standard deviations the observed value is removed from the expected value. A bond length (or angle) with $|Z| > 5$ is considered an outlier worth inspection. RMSZ is the root-mean-square of all Z scores of the bond lengths (or angles).

Mol	Chain	Bond lengths		Bond angles	
		RMSZ	$\#\|Z\| >5$	RMSZ	$\#\|Z\| >5$
1	A	0.54	0/1934	0.83	8/2632 (0.3%)
2	B	0.69	2/2162 (0.1%)	0.80	8/2943 (0.3%)
All	All	0.62	2/4096 (0.0%)	0.81	16/5575 (0.3%)

Chiral center outliers are detected by calculating the chiral volume of a chiral center and verifying if the center is modelled as a planar moiety or with the opposite hand. A planarity outlier is detected by checking planarity of atoms in a peptide group, atoms in a mainchain group or atoms of a sidechain that are expected to be planar.

Mol	Chain	#Chirality outliers	#Planarity outliers
2	B	0	1

All (2) bond length outliers are listed below:

Mol	Chain	Res	Type	Atoms	Z	Observed(Å)	Ideal(Å)
2	B	114	GLU	CD-OE2	17.08	1.44	1.25
2	B	114	GLU	CD-OE1	13.31	1.40	1.25

The worst 5 of 16 bond angle outliers are listed below:

Mol	Chain	Res	Type	Atoms	Z	Observed(^{o})	Ideal(^{o})
2	B	201	ASP	CB-CG-OD2	8.08	125.57	118.30
1	A	34	LEU	CA-CB-CG	6.50	130.26	115.30
2	B	124	ASP	CB-CG-OD2	6.24	123.92	118.30
1	A	223	ASP	CB-CG-OD2	6.10	123.79	118.30
1	A	20	ASP	CB-CG-OD2	6.05	123.75	118.30

There are no chirality outliers.

All (1) planarity outliers are listed below:

Mol	Chain	Res	Type	Group
2	B	114	GLU	Peptide

5.2 Too-close contacts (i)

In the following table, the Non-H and H(model) columns list the number of non-hydrogen atoms and hydrogen atoms in the chain respectively. The H(added) column lists the number of hydrogen atoms added and optimized by MolProbity. The Clashes column lists the number of clashes within the asymmetric unit, whereas Symm-Clashes lists symmetry related clashes.

Mol	Chain	Non-H	H(model)	H(added)	Clashes	Symm-Clashes
1	A	1903	0	1961	44	0
2	B	2119	0	2028	67	0
3	B	5	0	0	2	0
4	B	28	0	26	3	0
5	B	4	0	6	3	0
All	All	4059	0	4021	107	0

The all-atom clashscore is defined as the number of clashes found per 1000 atoms (including hydrogen atoms). The all-atom clashscore for this structure is 13.

The worst 5 of 107 close contacts within the same asymmetric unit are listed below, sorted by their clash magnitude.

Atom-1	Atom-2	Interatomic distance (Å)	Clash overlap (Å)
2:B:202:LEU:HD13	2:B:289:ILE:O	1.71	0.88
1:A:55:LEU:HD22	1:A:94:LEU:HD22	1.57	0.85
2:B:60:ARG:NH1	2:B:168:ARG:HD2	1.97	0.80
1:A:68:LEU:HD11	1:A:114:MET:HE2	1.63	0.79
1:A:68:LEU:HD11	1:A:114:MET:CE	2.17	0.74

There are no symmetry-related clashes.

5.3 Torsion angles (i)

5.3.1 Protein backbone (i)

In the following table, the Percentiles column shows the percent Ramachandran outliers of the chain as a percentile score with respect to all X-ray entries followed by that with respect to entries of similar resolution.

The Analysed column shows the number of residues for which the backbone conformation was analysed, and the total number of residues.

Mol	Chain	Analysed	Favoured	Allowed	Outliers	Percentiles
1	A	240/254 (94%)	210 (88%)	28 (12%)	2 (1%)	24 58
2	B	268/308 (87%)	229 (85%)	29 (11%)	10 (4%)	4 14
All	All	508/562 (90%)	439 (86%)	57 (11%)	12 (2%)	7 25

5 of 12 Ramachandran outliers are listed below:

Mol	Chain	Res	Type
2	B	72	GLU
2	B	114	GLU
2	B	115	PRO
1	A	117	SER
1	A	212	THR

5.3.2 Protein sidechains (i)

In the following table, the Percentiles column shows the percent sidechain outliers of the chain as a percentile score with respect to all X-ray entries followed by that with respect to entries of similar resolution.

The Analysed column shows the number of residues for which the sidechain conformation was analysed, and the total number of residues.

Mol	Chain	Analysed	Rotameric	Outliers	Percentiles
1	A	216/234 (92%)	195 (90%)	21 (10%)	10 29
2	B	217/272 (80%)	199 (92%)	18 (8%)	14 38
All	All	433/506 (86%)	394 (91%)	39 (9%)	12 34

5 of 39 residues with a non-rotameric sidechain are listed below:

Mol	Chain	Res	Type
1	A	217	TRP
2	B	66	ARG
2	B	240	GLU
1	A	226	SER
1	A	234	THR

Some sidechains can be flipped to improve hydrogen bonding and reduce clashes. 5 of 9 such sidechains are listed below:

Mol	Chain	Res	Type
1	A	129	ASN

Continued on next page...

Continued from previous page...

Mol	Chain	Res	Type
2	B	158	GLN
1	A	187	GLN
1	A	88	GLN
1	A	135	GLN

5.3.3 RNA (i)

There are no RNA molecules in this entry.

5.4 Non-standard residues in protein, DNA, RNA chains (i)

There are no non-standard protein/DNA/RNA residues in this entry.

5.5 Carbohydrates (i)

There are no carbohydrates in this entry.

5.6 Ligand geometry (i)

3 ligands are modelled in this entry.

In the following table, the Counts columns list the number of bonds (or angles) for which Mogul statistics could be retrieved, the number of bonds (or angles) that are observed in the model and the number of bonds (or angles) that are defined in the chemical component dictionary. The Link column lists molecule types, if any, to which the group is linked. The Z score for a bond length (or angle) is the number of standard deviations the observed value is removed from the expected value. A bond length (or angle) with $|Z| > 2$ is considered an outlier worth inspection. RMSZ is the root-mean-square of all Z scores of the bond lengths (or angles).

Mol	Type	Chain	Res	Link	Bond lengths			Bond angles		
					Counts	RMSZ	$\#\|Z\| > 2$	Counts	RMSZ	$\#\|Z\| > 2$
4	AP9	B	401	-	27,30,30	2.33	4 (14%)	33,43,43	2.04	7 (21%)
3	SO4	B	402	-	4,4,4	0.34	0	6,6,6	0.43	0
5	DMS	B	403	-	3,3,3	2.81	1 (33%)	3,3,3	1.02	0

In the following table, the Chirals column lists the number of chiral outliers, the number of chiral centers analysed, the number of these observed in the model and the number defined in the chemical component dictionary. Similar counts are reported in the Torsion and Rings columns. '-' means no outliers of that kind were identified.

Mol	Type	Chain	Res	Link	Chirals	Torsions	Rings
4	AP9	B	401	-	-	2/18/18/18	0/3/3/3
3	SO4	B	402	-	-	0/0/0/0	0/0/0/0
5	DMS	B	403	-	-	0/0/0/0	0/0/0/0

All (5) bond length outliers are listed below:

Mol	Chain	Res	Type	Atoms	Z	Observed(Å)	Ideal(Å)
4	B	401	AP9	C5A-CL1	-10.53	1.50	1.74
4	B	401	AP9	C1A-N6	-2.45	1.35	1.40
4	B	401	AP9	C6-N1	2.78	1.36	1.33
4	B	401	AP9	C5-C4	3.09	1.47	1.40
5	B	403	DMS	O-S	4.72	1.82	1.50

The worst 5 of 7 bond angle outliers are listed below:

Mol	Chain	Res	Type	Atoms	Z	Observed(^{o})	Ideal(^{o})
4	B	401	AP9	C4-C5-N7	-3.94	105.85	109.48
4	B	401	AP9	C5-C6-N1	-3.06	117.32	120.48
4	B	401	AP9	N3-C2-N1	-2.73	122.04	126.22
4	B	401	AP9	C2-N1-C6	2.39	121.82	116.92
4	B	401	AP9	C2-N2-C12	4.20	128.18	123.51

There are no chirality outliers.

All (2) torsion outliers are listed below:

Mol	Chain	Res	Type	Atoms
4	B	401	AP9	C11-C9-N9-C4
4	B	401	AP9	C11-C9-N9-C8

There are no ring outliers.

3 monomers are involved in 8 short contacts:

Mol	Chain	Res	Type	Clashes	Symm-Clashes
4	B	401	AP9	3	0
3	B	402	SO4	2	0
5	B	403	DMS	3	0

5.7 Other polymers (i)

There are no such residues in this entry.

5.8 Polymer linkage issues (i)

There are no chain breaks in this entry.

6 Fit of model and data (i)

6.1 Protein, DNA and RNA chains (i)

In the following table, the column labelled '#RSRZ> 2' contains the number (and percentage) of RSRZ outliers, followed by percent RSRZ outliers for the chain as percentile scores relative to all X-ray entries and entries of similar resolution. The OWAB column contains the minimum, median, 95th percentile and maximum values of the occupancy-weighted average B-factor per residue. The column labelled 'Q< 0.9' lists the number of (and percentage) of residues with an average occupancy less than 0.9.

Mol	Chain	Analysed	<RSRZ>	#RSRZ>2	OWAB(Å^2)	Q<0.9
1	A	244/254 (96%)	0.17	3 (1%) 81 73	62, 72, 86, 95	0
2	B	280/308 (90%)	0.59	32 (11%) 7 3	65, 72, 87, 102	0
All	All	524/562 (93%)	0.39	35 (6%) 21 12	62, 72, 87, 102	0

The worst 5 of 35 RSRZ outliers are listed below:

Mol	Chain	Res	Type	RSRZ
2	B	9	ALA	7.5
2	B	252	GLN	6.0
2	B	35	ASN	5.6
2	B	33	LEU	4.4
2	B	32	ASP	4.4

6.2 Non-standard residues in protein, DNA, RNA chains (i)

There are no non-standard protein/DNA/RNA residues in this entry.

6.3 Carbohydrates (i)

There are no carbohydrates in this entry.

6.4 Ligands (i)

In the following table, the Atoms column lists the number of modelled atoms in the group and the number defined in the chemical component dictionary. LLDF column lists the quality of electron density of the group with respect to its neighbouring residues in protein, DNA or RNA chains. The B-factors column lists the minimum, median, 95th percentile and maximum values of B factors of atoms in the group. The column labelled 'Q< 0.9' lists the number of atoms with occupancy less than 0.9.

Mol	Type	Chain	Res	Atoms	RSCC	RSR	LLDF	B-factors(Å^2)	Q<0.9
4	AP9	B	401	28/28	0.83	0.29	1.85	78,80,81,81	0
3	SO4	B	402	5/5	0.89	0.35	1.16	94,95,97,97	0
5	DMS	B	403	4/4	0.93	0.19	-0.07	87,87,87,88	0

6.5 Other polymers (i)

There are no such residues in this entry.