wwPDB X-ray Structure Validation Summary Report (i)

Feb 1, 2016 – 10:00 AM GMT

PDB ID	:	3KJM
Title	:	Leu492Ala mutant of Maize cytokinin oxidase/dehydrogenase complexed with phenylurea inhibitor CPPU
Authors	:	Kopecny, D.; Briozzo, P.
Deposited on	:	2009-11-03
Resolution	:	1.90 Å(reported)

This is a wwPDB X-ray Structure Validation Summary Report for a publicly released PDB entry.
We welcome your comments at validation@mail.wwpdb.org
A user guide is available at
http://wwpdb.org/validation/2016/XrayValidationReportHelp
with specific help available everywhere you see the (i) symbol.

The following versions of software and data (see references (1)) were used in the production of this report:

MolProbity	:	4.02b-467
Mogul	:	1.7 (RC4), CSD as536be (2015)
Xtriage (Phenix)	:	1.9-1692
EDS	:	rb-20026688
Percentile statistics	:	20151230.v01 (using entries in the PDB archive December 30th 2015)
Refmac	:	5.8.0135
CCP4	:	6.5.0
Ideal geometry (proteins)	:	Engh & Huber (2001)
Ideal geometry (DNA, RNA)	:	Parkinson et al. (1996)
Validation Pipeline (wwPDB-VP)	:	trunk26865

1 Overall quality at a glance (i)

The following experimental techniques were used to determine the structure:
X-RAY DIFFRACTION

The reported resolution of this entry is 1.90 Å.

Percentile scores (ranging between 0-100) for global validation metrics of the entry are shown in the following graphic. The table shows the number of entries on which the scores are based.

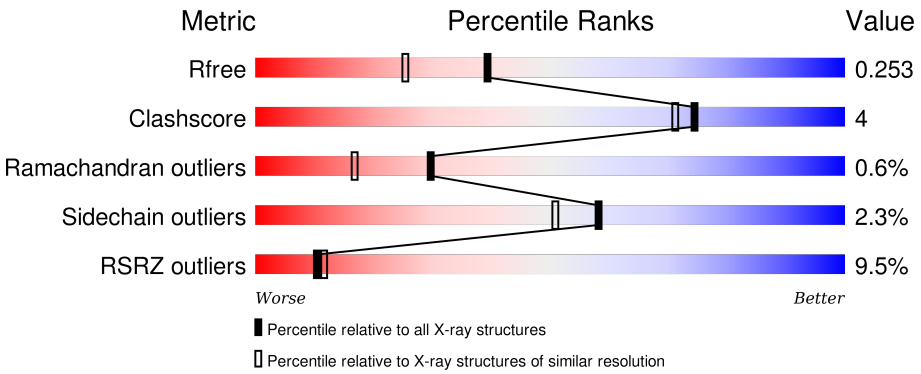

Metric	Whole archive (#Entries)	Similar resolution (#Entries, resolution range(Å))
R_{free}	91344	4755 (1.90-1.90)
Clashscore	102246	5398 (1.90-1.90)
Ramachandran outliers	100387	5338 (1.90-1.90)
Sidechain outliers	100360	5339 (1.90-1.90)
RSRZ outliers	91569	4766 (1.90-1.90)

The table below summarises the geometric issues observed across the polymeric chains and their fit to the electron density. The red, orange, yellow and green segments on the lower bar indicate the fraction of residues that contain outliers for >=3, 2, 1 and 0 types of geometric quality criteria. A grey segment represents the fraction of residues that are not modelled. The numeric value for each fraction is indicated below the corresponding segment, with a dot representing fractions <=5% The upper red bar (where present) indicates the fraction of residues that have poor fit to the electron density. The numeric value is given above the bar.

Mol	Chain	Length	Quality of chain
1	A	516	9% 88% 7% • •

The following table lists non-polymeric compounds, carbohydrate monomers and non-standard residues in protein, DNA, RNA chains that are outliers for geometric or electron-density-fit criteria:

Mol	Type	Chain	Res	Chirality	Geometry	Clashes	Electron density
5	NAG	A	702	-	-	-	X

Continued on next page...

Continued from previous page...

Mol	Type	Chain	Res	Chirality	Geometry	Clashes	Electron density
6	GOL	A	536	-	-	-	X
6	GOL	A	537	-	-	-	X
6	GOL	A	538	-	-	-	X
6	GOL	A	542	-	-	-	X

2 Entry composition (i)

There are 7 unique types of molecules in this entry. The entry contains 4328 atoms, of which 0 are hydrogens and 0 are deuteriums.

In the tables below, the ZeroOcc column contains the number of atoms modelled with zero occupancy, the AltConf column contains the number of residues with at least one atom in alternate conformation and the Trace column contains the number of residues modelled with at most 2 atoms.

- Molecule 1 is a protein called Cytokinin dehydrogenase 1.

Mol	Chain	Residues	Atoms					ZeroOcc	AltConf	Trace
			Total	C	N	O	S			
1	A	496	3802	2412	672	707	11	0	2	0

There are 4 discrepancies between the modelled and reference sequences:

Chain	Residue	Modelled	Actual	Comment	Reference
A	79	ALA	GLY	SEE REMARK 999	UNP Q9T0N8
A	168	THR	ASN	SEE REMARK 999	UNP Q9T0N8
A	254	LEU	PHE	SEE REMARK 999	UNP Q9T0N8
A	492	ALA	LEU	ENGINEERED	UNP Q9T0N8

- Molecule 2 is FLAVIN-ADENINE DINUCLEOTIDE (three-letter code: FAD) (formula: $C_{27}H_{33}N_9O_{15}P_2$).

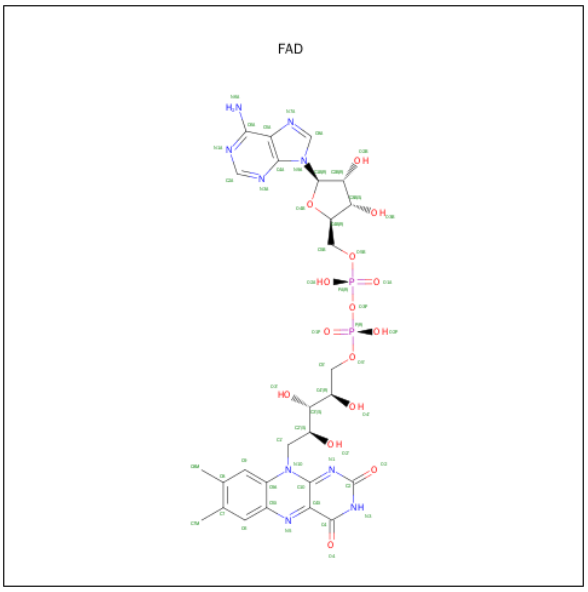

Mol	Chain	Residues	Atoms					ZeroOcc	AltConf
			Total	C	N	O	P		
2	A	1	53	27	9	15	2	0	0

- Molecule 3 is 1-(2-CHLOROPYRIDIN-4-YL)-3-PHENYLUREA (three-letter code: 245) (formula: $C_{12}H_{10}ClN_3O$).

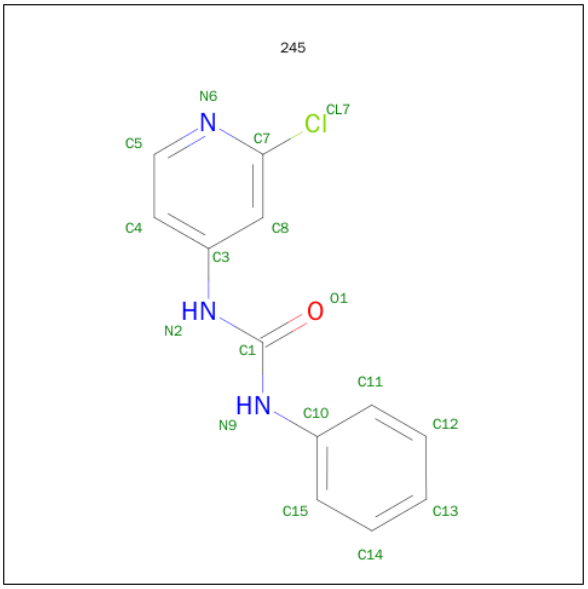

Mol	Chain	Residues	Atoms					ZeroOcc	AltConf
			Total	C	Cl	N	O		
3	A	1	34	24	2	6	2	0	1

- Molecule 4 is SUGAR (N-ACETYL-D-GLUCOSAMINE) (three-letter code: NAG) (formula: $C_8H_{15}NO_6$).

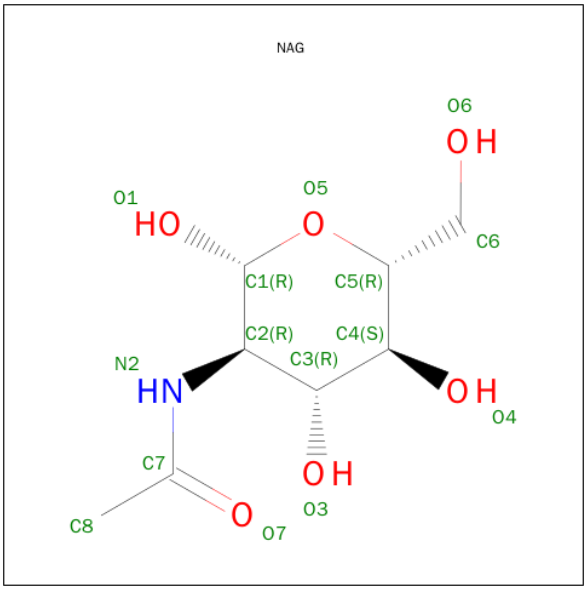

Mol	Chain	Residues	Atoms				ZeroOcc	AltConf
			Total	C	N	O		
4	A	1	14	8	1	5	0	0

Continued on next page...

Continued from previous page...

Mol	Chain	Residues	Atoms				ZeroOcc	AltConf
			Total	C	N	O		
4	A	1	14	8	1	5	0	0

- Molecule 5 is a polymer of unknown type called SUGAR (2-MER).

Mol	Chain	Residues	Atoms				ZeroOcc	AltConf
			Total	C	N	O		
5	A	2	28	16	2	10	0	0
			Total	C	N	O		
5	A	2	28	16	2	10	0	0

- Molecule 6 is GLYCEROL (three-letter code: GOL) (formula: $C_3H_8O_3$).

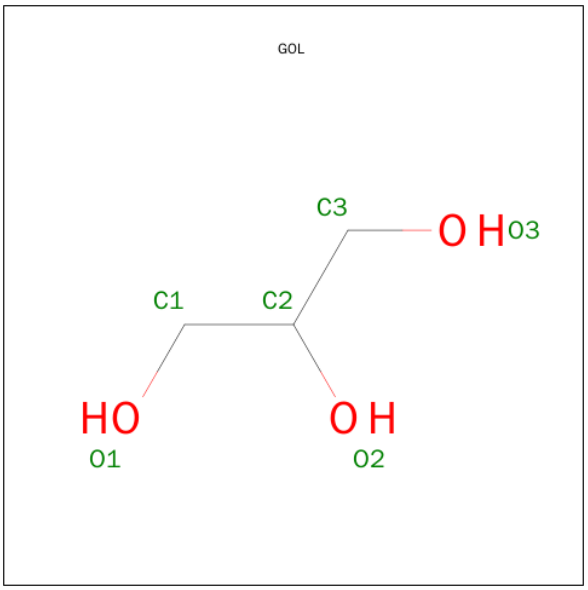

Mol	Chain	Residues	Atoms				ZeroOcc	AltConf
			Total	C	O			
6	A	1	6	3	3		0	0
			Total	C	O			
6	A	1	6	3	3		0	0
			Total	C	O			
6	A	1	6	3	3		0	0
			Total	C	O			
6	A	1	6	3	3		0	0
			Total	C	O			
6	A	1	6	3	3		0	0
			Total	C	O			
6	A	1	6	3	3		0	0

Continued on next page...

Continued from previous page...

Mol	Chain	Residues	Atoms			ZeroOcc	AltConf
			Total	C	O		
6	A	1	6	3	3	0	0
			Total	C	O		
6	A	1	6	3	3	0	0

- Molecule 7 is water.

Mol	Chain	Residues	Atoms		ZeroOcc	AltConf
			Total	O		
7	A	307	307	307	0	0

3 Residue-property plots (i)

These plots are drawn for all protein, RNA and DNA chains in the entry. The first graphic for a chain summarises the proportions of errors displayed in the second graphic. The second graphic shows the sequence view annotated by issues in geometry and electron density. Residues are color-coded according to the number of geometric quality criteria for which they contain at least one outlier: green = 0, yellow = 1, orange = 2 and red = 3 or more. A red dot above a residue indicates a poor fit to the electron density (RSRZ > 2). Stretches of 2 or more consecutive residues without any outlier are shown as a green connector. Residues present in the sample, but not in the model, are shown in grey.

- Molecule 1: Cytokinin dehydrogenase 1

Chain A:

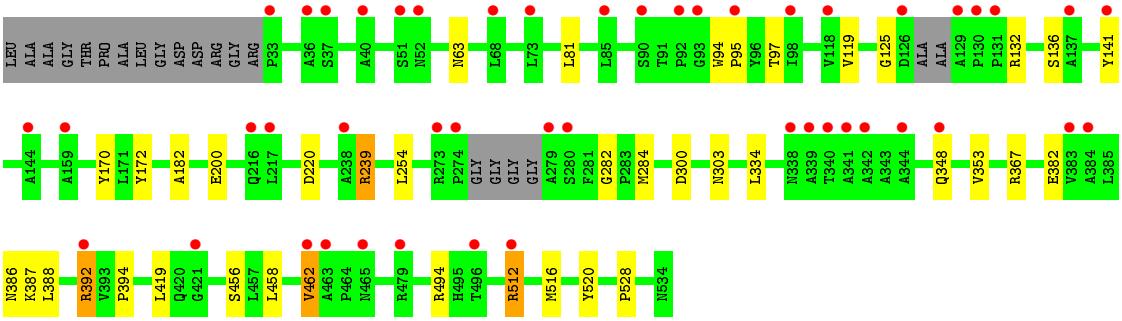

4 Data and refinement statistics (i)

Property	Value	Source
Space group	C 1 2 1	Depositor
Cell constants a, b, c, α, β, γ	248.96Å 50.46Å 50.77Å 90.00° 93.66° 90.00°	Depositor
Resolution (Å)	20.00 – 1.90 19.61 – 1.90	Depositor EDS
% Data completeness (in resolution range)	100.0 (20.00-1.90) 99.2 (19.61-1.90)	Depositor EDS
R_{merge}	0.04	Depositor
R_{sym}	(Not available)	Depositor
$< I/\sigma(I) >$ [1]	2.17 (at 1.90Å)	Xtriage
Refinement program	REFMAC 5.5.0072	Depositor
R, R_{free}	0.217 , 0.255 0.217 , 0.253	Depositor DCC
R_{free} test set	2475 reflections (5.26%)	DCC
Wilson B-factor (Å^2)	28.7	Xtriage
Anisotropy	0.067	Xtriage
Bulk solvent k_{sol}(e/Å^3), B_{sol}(Å^2)	0.40 , 55.5	EDS
Estimated twinning fraction	No twinning to report.	Xtriage
L-test for twinning[2]	$< \|L\| > = 0.48$, $< L^2 > = 0.31$	Xtriage
Outliers	0 of 49509 reflections	Xtriage
F_o,F_c correlation	0.95	EDS
Total number of atoms	4328	wwPDB-VP
Average B, all atoms (Å^2)	33.0	wwPDB-VP

Xtriage's analysis on translational NCS is as follows: *The largest off-origin peak in the Patterson function is 5.74% of the height of the origin peak. No significant pseudotranslation is detected.*

[1] Intensities estimated from amplitudes.

[2] Theoretical values of $< |L| >$, $< L^2 >$ for acentric reflections are 0.5, 0.375 respectively for untwinned datasets, and 0.333, 0.2 for perfectly twinned datasets.

5 Model quality (i)

5.1 Standard geometry (i)

Bond lengths and bond angles in the following residue types are not validated in this section: 245, GOL, NAG, FAD

The Z score for a bond length (or angle) is the number of standard deviations the observed value is removed from the expected value. A bond length (or angle) with $|Z| > 5$ is considered an outlier worth inspection. RMSZ is the root-mean-square of all Z scores of the bond lengths (or angles).

Mol	Chain	Bond lengths		Bond angles	
		RMSZ	$\#\|Z\| >5$	RMSZ	$\#\|Z\| >5$
1	A	0.36	0/3894	0.50	0/5303

There are no bond length outliers.

There are no bond angle outliers.

There are no chirality outliers.

There are no planarity outliers.

5.2 Too-close contacts (i)

In the following table, the Non-H and H(model) columns list the number of non-hydrogen atoms and hydrogen atoms in the chain respectively. The H(added) column lists the number of hydrogen atoms added and optimized by MolProbity. The Clashes column lists the number of clashes within the asymmetric unit, whereas Symm-Clashes lists symmetry related clashes.

Mol	Chain	Non-H	H(model)	H(added)	Clashes	Symm-Clashes
1	A	3802	0	3723	25	0
2	A	53	0	29	0	0
3	A	34	0	20	6	0
4	A	28	0	26	0	0
5	A	56	0	50	1	0
6	A	48	0	64	2	0
7	A	307	0	0	2	0
All	All	4328	0	3912	32	0

The all-atom clashscore is defined as the number of clashes found per 1000 atoms (including hydrogen atoms). The all-atom clashscore for this structure is 4.

The worst 5 of 32 close contacts within the same asymmetric unit are listed below, sorted by their clash magnitude.

Atom-1	Atom-2	Interatomic distance (Å)	Clash overlap (Å)
3:A:601[B]:245:O1	3:A:601[B]:245:H11	1.64	0.94
3:A:601[B]:245:H8	3:A:601[B]:245:O1	1.87	0.71
1:A:512[B]:ARG:HE	6:A:539:GOL:H11	1.54	0.71
1:A:141:TYR:CD1	1:A:239:ARG:HD2	2.33	0.63
3:A:601[B]:245:O1	3:A:601[B]:245:C8	2.50	0.59

There are no symmetry-related clashes.

5.3 Torsion angles (i)

5.3.1 Protein backbone (i)

In the following table, the Percentiles column shows the percent Ramachandran outliers of the chain as a percentile score with respect to all X-ray entries followed by that with respect to entries of similar resolution.

The Analysed column shows the number of residues for which the backbone conformation was analysed, and the total number of residues.

Mol	Chain	Analysed	Favoured	Allowed	Outliers	Percentiles
1	A	492/516 (95%)	473 (96%)	16 (3%)	3 (1%)	30 17

All (3) Ramachandran outliers are listed below:

Mol	Chain	Res	Type
1	A	182	ALA
1	A	462	VAL
1	A	282	GLY

5.3.2 Protein sidechains (i)

In the following table, the Percentiles column shows the percent sidechain outliers of the chain as a percentile score with respect to all X-ray entries followed by that with respect to entries of similar resolution.

The Analysed column shows the number of residues for which the sidechain conformation was analysed, and the total number of residues.

Mol	Chain	Analysed	Rotameric	Outliers	Percentiles
1	A	388/394 (98%)	378 (97%)	10 (3%)	54 45

5 of 10 residues with a non-rotameric sidechain are listed below:

Mol	Chain	Res	Type
1	A	392	ARG
1	A	419	LEU
1	A	494	ARG
1	A	388	LEU
1	A	462	VAL

Some sidechains can be flipped to improve hydrogen bonding and reduce clashes. All (1) such sidechains are listed below:

Mol	Chain	Res	Type
1	A	120	ASN

5.3.3 RNA (i)

There are no RNA molecules in this entry.

5.4 Non-standard residues in protein, DNA, RNA chains (i)

There are no non-standard protein/DNA/RNA residues in this entry.

5.5 Carbohydrates (i)

4 carbohydrates are modelled in this entry.

In the following table, the Counts columns list the number of bonds (or angles) for which Mogul statistics could be retrieved, the number of bonds (or angles) that are observed in the model and the number of bonds (or angles) that are defined in the chemical component dictionary. The Link column lists molecule types, if any, to which the group is linked. The Z score for a bond length (or angle) is the number of standard deviations the observed value is removed from the expected value. A bond length (or angle) with $|Z| > 2$ is considered an outlier worth inspection. RMSZ is the root-mean-square of all Z scores of the bond lengths (or angles).

Mol	Type	Chain	Res	Link	Bond lengths			Bond angles		
					Counts	RMSZ	$\#\|Z\| > 2$	Counts	RMSZ	$\#\|Z\| > 2$
5	NAG	A	702	1,5	14,14,15	0.60	0	15,19,21	0.57	0
5	NAG	A	703	5	14,14,15	0.56	0	15,19,21	0.61	0
5	NAG	A	704	1,5	14,14,15	0.52	0	15,19,21	0.59	0
5	NAG	A	705	5	14,14,15	0.50	0	15,19,21	0.73	0

In the following table, the Chirals column lists the number of chiral outliers, the number of chiral centers analysed, the number of these observed in the model and the number defined in the chemical

component dictionary. Similar counts are reported in the Torsion and Rings columns. '-' means no outliers of that kind were identified.

Mol	Type	Chain	Res	Link	Chirals	Torsions	Rings
5	NAG	A	702	1,5	-	0/6/23/26	0/1/1/1
5	NAG	A	703	5	-	0/6/23/26	0/1/1/1
5	NAG	A	704	1,5	-	0/6/23/26	0/1/1/1
5	NAG	A	705	5	-	0/6/23/26	0/1/1/1

There are no bond length outliers.

There are no bond angle outliers.

There are no chirality outliers.

There are no torsion outliers.

There are no ring outliers.

2 monomers are involved in 1 short contact:

Mol	Chain	Res	Type	Clashes	Symm-Clashes
5	A	702	NAG	1	0
5	A	703	NAG	1	0

5.6 Ligand geometry (i)

13 ligands are modelled in this entry.

In the following table, the Counts columns list the number of bonds (or angles) for which Mogul statistics could be retrieved, the number of bonds (or angles) that are observed in the model and the number of bonds (or angles) that are defined in the chemical component dictionary. The Link column lists molecule types, if any, to which the group is linked. The Z score for a bond length (or angle) is the number of standard deviations the observed value is removed from the expected value. A bond length (or angle) with $|Z| > 2$ is considered an outlier worth inspection. RMSZ is the root-mean-square of all Z scores of the bond lengths (or angles).

Mol	Type	Chain	Res	Link	Bond lengths			Bond angles		
					Counts	RMSZ	$\#\|Z\| > 2$	Counts	RMSZ	$\#\|Z\| > 2$
6	GOL	A	535	-	5,5,5	0.23	0	5,5,5	0.22	0
6	GOL	A	536	-	5,5,5	0.27	0	5,5,5	0.26	0
6	GOL	A	537	-	5,5,5	0.25	0	5,5,5	0.44	0
6	GOL	A	538	-	5,5,5	0.35	0	5,5,5	0.21	0
6	GOL	A	539	-	5,5,5	0.20	0	5,5,5	0.37	0
6	GOL	A	540	-	5,5,5	0.35	0	5,5,5	0.26	0
6	GOL	A	541	-	5,5,5	0.13	0	5,5,5	0.31	0
6	GOL	A	542	-	5,5,5	0.31	0	5,5,5	0.23	0
2	FAD	A	600	1	48,58,58	1.34	7 (14%)	54,89,89	2.07	7 (12%)

Mol	Type	Chain	Res	Link	Bond lengths			Bond angles		
					Counts	RMSZ	$\#\|Z\| > 2$	Counts	RMSZ	$\#\|Z\| > 2$
3	245	A	601[A]	-	18,18,18	1.53	2 (11%)	22,23,23	1.79	3 (13%)
3	245	A	601[B]	-	18,18,18	1.69	4 (22%)	22,23,23	1.87	6 (27%)
4	NAG	A	701	1	14,14,15	0.50	0	15,19,21	0.61	0
4	NAG	A	706	1	14,14,15	0.48	0	15,19,21	0.74	0

In the following table, the Chirals column lists the number of chiral outliers, the number of chiral centers analysed, the number of these observed in the model and the number defined in the chemical component dictionary. Similar counts are reported in the Torsion and Rings columns. '-' means no outliers of that kind were identified.

Mol	Type	Chain	Res	Link	Chirals	Torsions	Rings
6	GOL	A	535	-	-	0/4/4/4	0/0/0/0
6	GOL	A	536	-	-	0/4/4/4	0/0/0/0
6	GOL	A	537	-	-	0/4/4/4	0/0/0/0
6	GOL	A	538	-	-	0/4/4/4	0/0/0/0
6	GOL	A	539	-	-	0/4/4/4	0/0/0/0
6	GOL	A	540	-	-	0/4/4/4	0/0/0/0
6	GOL	A	541	-	-	0/4/4/4	0/0/0/0
6	GOL	A	542	-	-	0/4/4/4	0/0/0/0
2	FAD	A	600	1	-	0/30/50/50	0/6/6/6
3	245	A	601[A]	-	-	0/8/8/8	0/2/2/2
3	245	A	601[B]	-	-	0/8/8/8	0/2/2/2
4	NAG	A	701	1	-	0/6/23/26	0/1/1/1
4	NAG	A	706	1	-	0/6/23/26	0/1/1/1

The worst 5 of 13 bond length outliers are listed below:

Mol	Chain	Res	Type	Atoms	Z	Observed(Å)	Ideal(Å)
3	A	601[B]	245	C3-N2	-4.27	1.33	1.41
3	A	601[B]	245	C10-N9	-4.26	1.33	1.41
3	A	601[A]	245	C10-N9	-4.00	1.34	1.41
3	A	601[A]	245	C3-N2	-3.72	1.34	1.41
2	A	600	FAD	C8M-C8	-3.36	1.44	1.51

The worst 5 of 16 bond angle outliers are listed below:

Mol	Chain	Res	Type	Atoms	Z	Observed(^{o})	Ideal(^{o})
2	A	600	FAD	N3A-C2A-N1A	-11.83	119.84	128.89
3	A	601[A]	245	C8-C7-N6	-4.54	120.74	125.46
3	A	601[B]	245	C8-C7-N6	-4.25	121.04	125.46
2	A	600	FAD	P-O3P-PA	-3.61	122.59	132.73
3	A	601[A]	245	C4-C5-N6	-3.41	120.01	123.90

There are no chirality outliers.

There are no torsion outliers.

There are no ring outliers.

4 monomers are involved in 8 short contacts:

Mol	Chain	Res	Type	Clashes	Symm-Clashes
6	A	538	GOL	1	0
6	A	539	GOL	1	0
3	A	601[A]	245	2	0
3	A	601[B]	245	4	0

5.7 Other polymers (i)

There are no such residues in this entry.

5.8 Polymer linkage issues (i)

There are no chain breaks in this entry.

6 Fit of model and data (i)

6.1 Protein, DNA and RNA chains (i)

In the following table, the column labelled '#RSRZ> 2' contains the number (and percentage) of RSRZ outliers, followed by percent RSRZ outliers for the chain as percentile scores relative to all X-ray entries and entries of similar resolution. The OWAB column contains the minimum, median, 95th percentile and maximum values of the occupancy-weighted average B-factor per residue. The column labelled 'Q< 0.9' lists the number of (and percentage) of residues with an average occupancy less than 0.9.

Mol	Chain	Analysed	<RSRZ>	#RSRZ>2			OWAB(Å^2)	Q<0.9
1	A	496/516 (96%)	0.57	47 (9%)	10	12	17, 31, 52, 60	0

The worst 5 of 47 RSRZ outliers are listed below:

Mol	Chain	Res	Type	RSRZ
1	A	279	ALA	11.1
1	A	274	PRO	6.5
1	A	130	PRO	5.5
1	A	344	ALA	5.3
1	A	36	ALA	5.1

6.2 Non-standard residues in protein, DNA, RNA chains (i)

There are no non-standard protein/DNA/RNA residues in this entry.

6.3 Carbohydrates (i)

In the following table, the Atoms column lists the number of modelled atoms in the group and the number defined in the chemical component dictionary. LLDF column lists the quality of electron density of the group with respect to its neighbouring residues in protein, DNA or RNA chains. The B-factors column lists the minimum, median, 95th percentile and maximum values of B factors of atoms in the group. The column labelled 'Q< 0.9' lists the number of atoms with occupancy less than 0.9.

Mol	Type	Chain	Res	Atoms	RSCC	RSR	LLDF	B-factors(Å^2)	Q<0.9
5	NAG	A	702	14/15	0.39	0.41	2.60	55,55,55,55	14
5	NAG	A	704	14/15	0.83	0.25	-	43,48,50,52	0
5	NAG	A	703	14/15	0.55	0.52	-	55,56,56,56	14
5	NAG	A	705	14/15	0.75	0.41	-	55,56,57,57	0

6.4 Ligands (i)

In the following table, the Atoms column lists the number of modelled atoms in the group and the number defined in the chemical component dictionary. LLDF column lists the quality of electron density of the group with respect to its neighbouring residues in protein, DNA or RNA chains. The B-factors column lists the minimum, median, 95th percentile and maximum values of B factors of atoms in the group. The column labelled 'Q< 0.9' lists the number of atoms with occupancy less than 0.9.

Mol	Type	Chain	Res	Atoms	RSCC	RSR	LLDF	B-factors(Å^2)	Q<0.9
6	GOL	A	537	6/6	0.71	0.28	5.81	57,58,58,59	0
6	GOL	A	542	6/6	0.66	0.37	4.33	71,71,71,72	0
6	GOL	A	538	6/6	0.79	0.25	4.06	63,64,64,64	0
6	GOL	A	536	6/6	0.84	0.27	2.20	64,64,64,64	0
6	GOL	A	540	6/6	0.85	0.20	1.63	36,41,42,42	0
6	GOL	A	539	6/6	0.81	0.22	1.39	48,48,49,50	0
4	NAG	A	701	14/15	0.89	0.19	0.75	34,36,39,40	0
3	245	A	601[B]	17/17	0.95	0.11	0.71	29,30,32,34	17
3	245	A	601[A]	17/17	0.95	0.11	0.58	12,13,15,17	17
6	GOL	A	541	6/6	0.83	0.18	0.26	51,52,53,53	0
2	FAD	A	600	53/53	0.96	0.09	-0.42	15,22,25,26	0
4	NAG	A	706	14/15	0.84	0.30	-	41,45,46,46	0
6	GOL	A	535	6/6	0.79	0.21	-	56,57,57,57	0

6.5 Other polymers (i)

There are no such residues in this entry.