Full wwPDB X-ray Structure Validation Report (i)

Feb 1, 2016 – 11:55 AM GMT

PDB ID	:	3QI1
Title	:	Design and synthesis of hydroxyethylamine (hea) BACE-1 inhibitors: prime side chromane-containing inhibitors
Authors	:	Yao, N.
Deposited on	:	2011-01-26
Resolution	:	2.30 Å(reported)

This is a Full wwPDB X-ray Structure Validation Report for a publicly released PDB entry.
We welcome your comments at validation@mail.wwpdb.org
A user guide is available at
http://wwpdb.org/validation/2016/XrayValidationReportHelp
with specific help available everywhere you see the (i) symbol.

The following versions of software and data (see references (1)) were used in the production of this report:

MolProbity	:	4.02b-467
Mogul	:	1.7 (RC4), CSD as536be (2015)
Xtriage (Phenix)	:	1.9-1692
EDS	:	rb-20026688
Percentile statistics	:	20151230.v01 (using entries in the PDB archive December 30th 2015)
Refmac	:	5.8.0135
CCP4	:	6.5.0
Ideal geometry (proteins)	:	Engh & Huber (2001)
Ideal geometry (DNA, RNA)	:	Parkinson et al. (1996)
Validation Pipeline (wwPDB-VP)	:	trunk26865

1 Overall quality at a glance (i)

The following experimental techniques were used to determine the structure:
X-RAY DIFFRACTION

The reported resolution of this entry is 2.30 Å.

Percentile scores (ranging between 0-100) for global validation metrics of the entry are shown in the following graphic. The table shows the number of entries on which the scores are based.

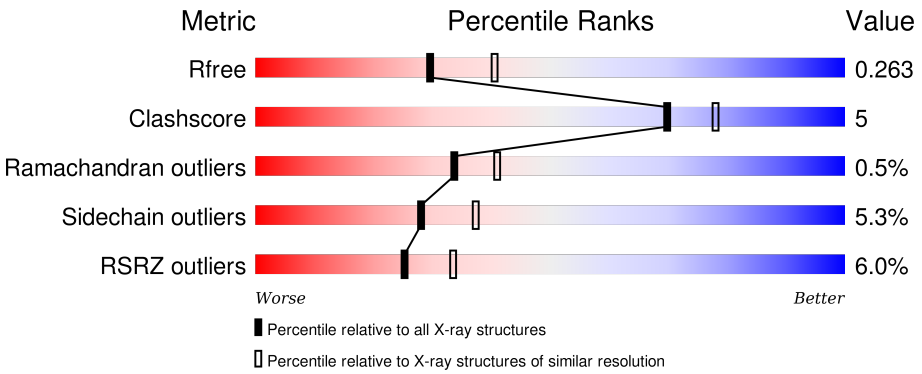

Metric	Whole archive (#Entries)	Similar resolution (#Entries, resolution range(Å))
R_{free}	91344	3852 (2.30-2.30)
Clashscore	102246	4452 (2.30-2.30)
Ramachandran outliers	100387	4410 (2.30-2.30)
Sidechain outliers	100360	4409 (2.30-2.30)
RSRZ outliers	91569	3857 (2.30-2.30)

The table below summarises the geometric issues observed across the polymeric chains and their fit to the electron density. The red, orange, yellow and green segments on the lower bar indicate the fraction of residues that contain outliers for >=3, 2, 1 and 0 types of geometric quality criteria. A grey segment represents the fraction of residues that are not modelled. The numeric value for each fraction is indicated below the corresponding segment, with a dot representing fractions <=5% The upper red bar (where present) indicates the fraction of residues that have poor fit to the electron density. The numeric value is given above the bar.

Mol	Chain	Length	Quality of chain
1	A	408	6% 77% 15% • 6%

2 Entry composition (i)

There are 3 unique types of molecules in this entry. The entry contains 3236 atoms, of which 0 are hydrogens and 0 are deuteriums.

In the tables below, the ZeroOcc column contains the number of atoms modelled with zero occupancy, the AltConf column contains the number of residues with at least one atom in alternate conformation and the Trace column contains the number of residues modelled with at most 2 atoms.

- Molecule 1 is a protein called Beta-secretase 1.

Mol	Chain	Residues	Atoms					ZeroOcc	AltConf	Trace
			Total	C	N	O	S			
1	A	382	2986	1911	497	564	14	0	0	0

There are 13 discrepancies between the modelled and reference sequences:

Chain	Residue	Modelled	Actual	Comment	Reference
A	-9	GLU	-	EXPRESSION TAG	UNP P56817
A	-8	THR	-	EXPRESSION TAG	UNP P56817
A	-7	ASP	-	EXPRESSION TAG	UNP P56817
A	-6	GLU	-	EXPRESSION TAG	UNP P56817
A	-5	GLU	-	EXPRESSION TAG	UNP P56817
A	-4	PRO	-	EXPRESSION TAG	UNP P56817
A	-3	GLU	-	EXPRESSION TAG	UNP P56817
A	-2	GLU	-	EXPRESSION TAG	UNP P56817
A	-1	PRO	-	EXPRESSION TAG	UNP P56817
A	0	GLY	-	EXPRESSION TAG	UNP P56817
A	1	ARG	-	EXPRESSION TAG	UNP P56817
A	81	ALA	LYS	ENGINEERED MUTATION	UNP P56817
A	83	ALA	GLU	ENGINEERED MUTATION	UNP P56817

- Molecule 2 is N-[(2S,3R)-4-{[(2R,4S)-2-CYCLOPROPYL-6-(2,2-DIMETHYLPROPYL)-3,4-DIHYDRO-2H-CHROMEN-4-YL]AMINO}-1-(3,5-DIFLUOROPHENYL)-3-HYDROXYBUTAN-2-YL]ACETAMIDE (three-letter code: C6A) (formula: $C_{29}H_{38}F_2N_2O_3$).

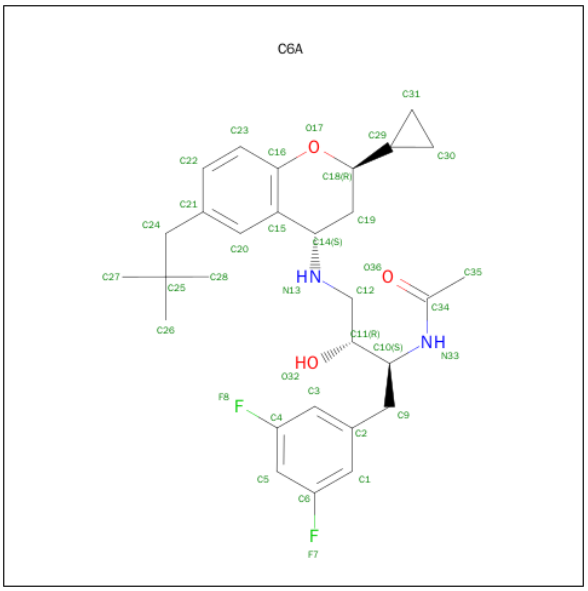

Mol	Chain	Residues	Atoms					ZeroOcc	AltConf
			Total	C	F	N	O		
2	A	1	36	29	2	2	3	0	0

- Molecule 3 is water.

Mol	Chain	Residues	Atoms		ZeroOcc	AltConf
			Total	O		
3	A	214	214	214	0	0

3 Residue-property plots (i)

These plots are drawn for all protein, RNA and DNA chains in the entry. The first graphic for a chain summarises the proportions of errors displayed in the second graphic. The second graphic shows the sequence view annotated by issues in geometry and electron density. Residues are color-coded according to the number of geometric quality criteria for which they contain at least one outlier: green = 0, yellow = 1, orange = 2 and red = 3 or more. A red dot above a residue indicates a poor fit to the electron density (RSRZ > 2). Stretches of 2 or more consecutive residues without any outlier are shown as a green connector. Residues present in the sample, but not in the model, are shown in grey.

- Molecule 1: Beta-secretase 1

Chain A:

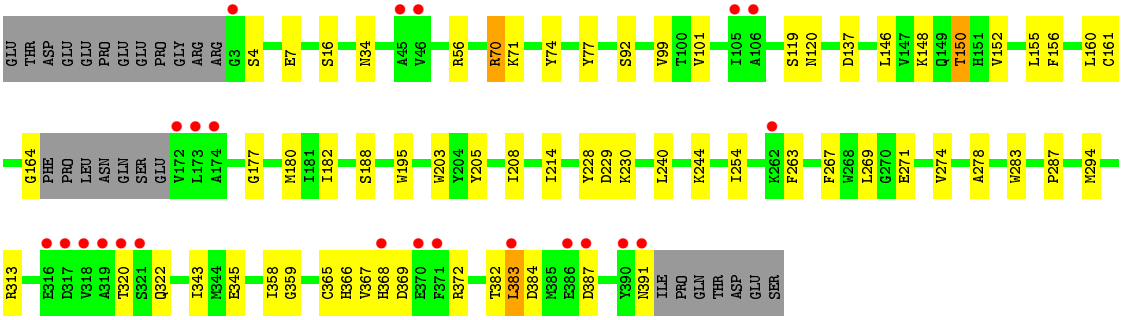

4 Data and refinement statistics (i)

Property	Value	Source
Space group	P 21 21 21	Depositor
Cell constants a, b, c, α, β, γ	72.17Å 75.51Å 80.24Å 90.00° 90.00° 90.00°	Depositor
Resolution (Å)	25.69 – 2.30 25.28 – 2.30	Depositor EDS
% Data completeness (in resolution range)	95.8 (25.69-2.30) 95.9 (25.28-2.30)	Depositor EDS
R_{merge}	0.09	Depositor
R_{sym}	(Not available)	Depositor
$< I/\sigma(I) >$ [1]	2.19 (at 2.31Å)	Xtriage
Refinement program	REFMAC 5.5.0109	Depositor
R, R_{free}	0.198 , 0.269 0.193 , 0.263	Depositor DCC
R_{free} test set	986 reflections (5.40%)	DCC
Wilson B-factor (Å^2)	32.3	Xtriage
Anisotropy	0.061	Xtriage
Bulk solvent k_{sol}(e/Å^3), B_{sol}(Å^2)	0.31 , 35.7	EDS
Estimated twinning fraction	0.023 for k,h,-l	Xtriage
L-test for twinning[2]	$< \|L\| > = 0.51$, $< L^2 > = 0.35$	Xtriage
Outliers	0 of 19234 reflections	Xtriage
F_o,F_c correlation	0.95	EDS
Total number of atoms	3236	wwPDB-VP
Average B, all atoms (Å^2)	29.0	wwPDB-VP

Xtriage's analysis on translational NCS is as follows: *The largest off-origin peak in the Patterson function is 5.26% of the height of the origin peak. No significant pseudotranslation is detected.*

[1] Intensities estimated from amplitudes.

[2] Theoretical values of $< |L| >$, $< L^2 >$ for acentric reflections are 0.5, 0.375 respectively for untwinned datasets, and 0.333, 0.2 for perfectly twinned datasets.

5 Model quality (i)

5.1 Standard geometry (i)

Bond lengths and bond angles in the following residue types are not validated in this section: C6A

The Z score for a bond length (or angle) is the number of standard deviations the observed value is removed from the expected value. A bond length (or angle) with $|Z| > 5$ is considered an outlier worth inspection. RMSZ is the root-mean-square of all Z scores of the bond lengths (or angles).

Mol	Chain	Bond lengths		Bond angles	
		RMSZ	$\#\|Z\|>5$	RMSZ	$\#\|Z\|>5$
1	A	1.02	1/3061 (0.0%)	0.90	5/4162 (0.1%)

All (1) bond length outliers are listed below:

Mol	Chain	Res	Type	Atoms	Z	Observed(Å)	Ideal(Å)
1	A	283	TRP	CE3-CZ3	5.21	1.47	1.38

All (5) bond angle outliers are listed below:

Mol	Chain	Res	Type	Atoms	Z	Observed(^{o})	Ideal(^{o})
1	A	150	THR	C-N-CA	-6.05	106.57	121.70
1	A	313	ARG	NE-CZ-NH1	5.82	123.21	120.30
1	A	137	ASP	CB-CG-OD1	5.49	123.24	118.30
1	A	150	THR	N-CA-C	-5.17	97.05	111.00
1	A	313	ARG	NE-CZ-NH2	-5.04	117.78	120.30

There are no chirality outliers.

There are no planarity outliers.

5.2 Too-close contacts (i)

In the following table, the Non-H and H(model) columns list the number of non-hydrogen atoms and hydrogen atoms in the chain respectively. The H(added) column lists the number of hydrogen atoms added and optimized by MolProbity. The Clashes column lists the number of clashes within the asymmetric unit, whereas Symm-Clashes lists symmetry related clashes.

Mol	Chain	Non-H	H(model)	H(added)	Clashes	Symm-Clashes
1	A	2986	0	2897	27	2
2	A	36	0	38	3	0

Continued on next page...

Continued from previous page...

Mol	Chain	Non-H	H(model)	H(added)	Clashes	Symm-Clashes
3	A	214	0	0	2	3
All	All	3236	0	2935	27	4

The all-atom clashscore is defined as the number of clashes found per 1000 atoms (including hydrogen atoms). The all-atom clashscore for this structure is 5.

All (27) close contacts within the same asymmetric unit are listed below, sorted by their clash magnitude.

Atom-1	Atom-2	Interatomic distance (Å)	Clash overlap (Å)
1:A:322:GLN:HB2	3:A:514:HOH:O	1.67	0.94
1:A:384:ASP:O	1:A:387:ASP:HB2	1.84	0.75
1:A:369:ASP:HB3	1:A:372:ARG:O	1.96	0.66
1:A:278:ALA:HB2	1:A:322:GLN:O	1.98	0.64
1:A:365:CYS:O	1:A:365:CYS:SG	2.55	0.63
1:A:230:LYS:HE2	2:A:401:C6A:H30	1.84	0.59
1:A:161:CYS:HB2	1:A:177:GLY:O	2.10	0.52
1:A:230:LYS:HE2	2:A:401:C6A:C30	2.40	0.51
1:A:254:ILE:HG23	1:A:287:PRO:HD2	1.92	0.50
1:A:101:VAL:HG11	1:A:146:LEU:HD12	1.92	0.49
1:A:267:PHE:CE1	1:A:274:VAL:HG22	2.49	0.48
1:A:77:TYR:CG	2:A:401:C6A:H1	2.49	0.47
1:A:180:MET:CE	1:A:182:ILE:HD11	2.44	0.47
1:A:119:SER:O	1:A:120:ASN:HB2	2.15	0.46
1:A:92:SER:HB3	1:A:99:VAL:O	2.16	0.45
1:A:195:TRP:O	1:A:359:GLY:HA2	2.16	0.45
1:A:205:TYR:HB3	1:A:358:ILE:HD11	1.99	0.44
1:A:240:LEU:HD22	1:A:343:ILE:HD11	2.00	0.43
1:A:99:VAL:HB	1:A:150:THR:HG21	2.02	0.42
1:A:160:LEU:O	1:A:345:GLU:HA	2.19	0.42
1:A:382:THR:HG22	1:A:383:LEU:N	2.35	0.42
1:A:208:ILE:HB	1:A:294:MET:HE2	2.02	0.42
1:A:228:TYR:HA	1:A:229:ASP:HA	1.74	0.41
1:A:155:LEU:HD23	1:A:156:PHE:N	2.35	0.41
1:A:34:ASN:HB2	1:A:120:ASN:O	2.21	0.41
1:A:164:GLY:C	3:A:658:HOH:O	2.59	0.41
1:A:263:PHE:CD2	1:A:274:VAL:HG11	2.57	0.40

All (4) symmetry-related close contacts are listed below. The label for Atom-2 includes the symmetry operator and encoded unit-cell translations to be applied.

Atom-1	Atom-2	Interatomic distance (Å)	Clash overlap (Å)
3:A:629:HOH:O	3:A:663:HOH:O[3_554]	1.65	0.55
1:A:188:SER:OG	3:A:630:HOH:O[3_544]	2.04	0.16
3:A:630:HOH:O	3:A:662:HOH:O[3_554]	2.09	0.11
1:A:70:ARG:NE	1:A:366:HIS:O[3_554]	2.16	0.04

5.3 Torsion angles (i)

5.3.1 Protein backbone (i)

In the following table, the Percentiles column shows the percent Ramachandran outliers of the chain as a percentile score with respect to all X-ray entries followed by that with respect to entries of similar resolution.

The Analysed column shows the number of residues for which the backbone conformation was analysed, and the total number of residues.

Mol	Chain	Analysed	Favoured	Allowed	Outliers	Percentiles
1	A	378/408 (93%)	363 (96%)	13 (3%)	2 (0%)	34 41

All (2) Ramachandran outliers are listed below:

Mol	Chain	Res	Type
1	A	244	LYS
1	A	320	THR

5.3.2 Protein sidechains (i)

In the following table, the Percentiles column shows the percent sidechain outliers of the chain as a percentile score with respect to all X-ray entries followed by that with respect to entries of similar resolution.

The Analysed column shows the number of residues for which the sidechain conformation was analysed, and the total number of residues.

Mol	Chain	Analysed	Rotameric	Outliers	Percentiles
1	A	322/347 (93%)	305 (95%)	17 (5%)	28 37

All (17) residues with a non-rotameric sidechain are listed below:

Mol	Chain	Res	Type
1	A	4	SER

Continued on next page...

Continued from previous page...

Mol	Chain	Res	Type
1	A	7	GLU
1	A	16	SER
1	A	56	ARG
1	A	70	ARG
1	A	71	LYS
1	A	74	TYR
1	A	148	LYS
1	A	152	VAL
1	A	203	TRP
1	A	214	ILE
1	A	269	LEU
1	A	271	GLU
1	A	367	VAL
1	A	368	HIS
1	A	383	LEU
1	A	391	ASN

Some sidechains can be flipped to improve hydrogen bonding and reduce clashes. All (2) such sidechains are listed below:

Mol	Chain	Res	Type
1	A	272	GLN
1	A	300	GLN

5.3.3 RNA (i)

There are no RNA molecules in this entry.

5.4 Non-standard residues in protein, DNA, RNA chains (i)

There are no non-standard protein/DNA/RNA residues in this entry.

5.5 Carbohydrates (i)

There are no carbohydrates in this entry.

5.6 Ligand geometry (i)

1 ligand is modelled in this entry.

In the following table, the Counts columns list the number of bonds (or angles) for which Mogul statistics could be retrieved, the number of bonds (or angles) that are observed in the model and the number of bonds (or angles) that are defined in the chemical component dictionary. The Link column lists molecule types, if any, to which the group is linked. The Z score for a bond length (or angle) is the number of standard deviations the observed value is removed from the expected value. A bond length (or angle) with $|Z| > 2$ is considered an outlier worth inspection. RMSZ is the root-mean-square of all Z scores of the bond lengths (or angles).

Mol	Type	Chain	Res	Link	Bond lengths			Bond angles		
					Counts	RMSZ	$\#\|Z\| > 2$	Counts	RMSZ	$\#\|Z\| > 2$
2	C6A	A	401	-	38,39,39	1.23	2 (5%)	49,57,57	1.72	12 (24%)

In the following table, the Chirals column lists the number of chiral outliers, the number of chiral centers analysed, the number of these observed in the model and the number defined in the chemical component dictionary. Similar counts are reported in the Torsion and Rings columns. '-' means no outliers of that kind were identified.

Mol	Type	Chain	Res	Link	Chirals	Torsions	Rings
2	C6A	A	401	-	-	0/22/40/40	0/3/4/4

All (2) bond length outliers are listed below:

Mol	Chain	Res	Type	Atoms	Z	Observed(Å)	Ideal(Å)
2	A	401	C6A	O17-C18	-2.19	1.42	1.45
2	A	401	C6A	C16-C15	4.64	1.49	1.39

All (12) bond angle outliers are listed below:

Mol	Chain	Res	Type	Atoms	Z	Observed(^{o})	Ideal(^{o})
2	A	401	C6A	C24-C21-C20	-4.41	114.16	120.43
2	A	401	C6A	C2-C9-C10	-3.56	107.82	113.48
2	A	401	C6A	C19-C14-N13	-3.51	106.15	111.57
2	A	401	C6A	C10-N33-C34	-2.80	119.45	123.04
2	A	401	C6A	O17-C16-C15	-2.74	116.43	122.35
2	A	401	C6A	C5-C4-C3	-2.46	120.27	123.52
2	A	401	C6A	C11-C10-N33	-2.38	105.89	109.73
2	A	401	C6A	F8-C4-C3	2.07	120.98	118.22
2	A	401	C6A	C24-C21-C22	2.47	124.59	121.08
2	A	401	C6A	C2-C3-C4	2.66	121.05	118.84
2	A	401	C6A	O17-C16-C23	2.97	122.14	116.63
2	A	401	C6A	C16-O17-C18	3.54	122.48	115.47

There are no chirality outliers.

There are no torsion outliers.

There are no ring outliers.

1 monomer is involved in 3 short contacts:

Mol	Chain	Res	Type	Clashes	Symm-Clashes
2	A	401	C6A	3	0

5.7 Other polymers (i)

There are no such residues in this entry.

5.8 Polymer linkage issues (i)

There are no chain breaks in this entry.

6 Fit of model and data (i)

6.1 Protein, DNA and RNA chains (i)

In the following table, the column labelled '#RSRZ> 2' contains the number (and percentage) of RSRZ outliers, followed by percent RSRZ outliers for the chain as percentile scores relative to all X-ray entries and entries of similar resolution. The OWAB column contains the minimum, median, 95th percentile and maximum values of the occupancy-weighted average B-factor per residue. The column labelled 'Q< 0.9' lists the number of (and percentage) of residues with an average occupancy less than 0.9.

Mol	Chain	Analysed	<RSRZ>	#RSRZ>2	OWAB(Å^2)	Q<0.9
1	A	382/408 (93%)	0.03	23 (6%) 25 33	13, 26, 55, 75	0

All (23) RSRZ outliers are listed below:

Mol	Chain	Res	Type	RSRZ
1	A	173	LEU	6.8
1	A	319	ALA	5.9
1	A	3	GLY	5.9
1	A	320	THR	4.1
1	A	318	VAL	4.0
1	A	383	LEU	3.9
1	A	386	GLU	3.6
1	A	174	ALA	3.3
1	A	368	HIS	3.2
1	A	371	PHE	3.0
1	A	317	ASP	2.9
1	A	387	ASP	2.9
1	A	321	SER	2.8
1	A	391	ASN	2.8
1	A	106	ALA	2.7
1	A	45	ALA	2.5
1	A	390	TYR	2.5
1	A	316	GLU	2.4
1	A	370	GLU	2.3
1	A	105	ILE	2.3
1	A	262	LYS	2.2
1	A	172	VAL	2.2
1	A	46	VAL	2.2

6.2 Non-standard residues in protein, DNA, RNA chains (i)

There are no non-standard protein/DNA/RNA residues in this entry.

6.3 Carbohydrates (i)

There are no carbohydrates in this entry.

6.4 Ligands (i)

In the following table, the Atoms column lists the number of modelled atoms in the group and the number defined in the chemical component dictionary. LLDF column lists the quality of electron density of the group with respect to its neighbouring residues in protein, DNA or RNA chains. The B-factors column lists the minimum, median, 95th percentile and maximum values of B factors of atoms in the group. The column labelled 'Q< 0.9' lists the number of atoms with occupancy less than 0.9.

Mol	Type	Chain	Res	Atoms	RSCC	RSR	LLDF	B-factors(Å^2)	Q<0.9
2	C6A	A	401	36/36	0.94	0.10	-0.55	11,21,29,33	0

6.5 Other polymers (i)

There are no such residues in this entry.