wwPDB X-ray Structure Validation Summary Report (i)

Feb 1, 2016 – 08:14 PM GMT

PDB ID	:	4RA7
Title	:	Structure of a putative peptidoglycan glycosyltransferase from Atopobium parvulum in complex with nafcillin
Authors	:	Filippova, E.V.; Minasov, G.; Kiryukhina, O.; Clancy, S.; Joachimiak, A.; Anderson, W.F.; Midwest Center for Structural Genomics (MCSG)
Deposited on	:	2014-09-09
Resolution	:	1.94 Å(reported)

This is a wwPDB X-ray Structure Validation Summary Report for a publicly released PDB entry.
We welcome your comments at validation@mail.wwpdb.org
A user guide is available at
http://wwpdb.org/validation/2016/XrayValidationReportHelp
with specific help available everywhere you see the (i) symbol.

The following versions of software and data (see references (1)) were used in the production of this report:

MolProbity	:	4.02b-467
Mogul	:	1.7 (RC4), CSD as536be (2015)
Xtriage (Phenix)	:	1.9-1692
EDS	:	rb-20026688
Percentile statistics	:	20151230.v01 (using entries in the PDB archive December 30th 2015)
Refmac	:	5.8.0135
CCP4	:	6.5.0
Ideal geometry (proteins)	:	Engh & Huber (2001)
Ideal geometry (DNA, RNA)	:	Parkinson et al. (1996)
Validation Pipeline (wwPDB-VP)	:	trunk26865

1 Overall quality at a glance (i)

The following experimental techniques were used to determine the structure:
X-RAY DIFFRACTION

The reported resolution of this entry is 1.94 Å.

Percentile scores (ranging between 0-100) for global validation metrics of the entry are shown in the following graphic. The table shows the number of entries on which the scores are based.

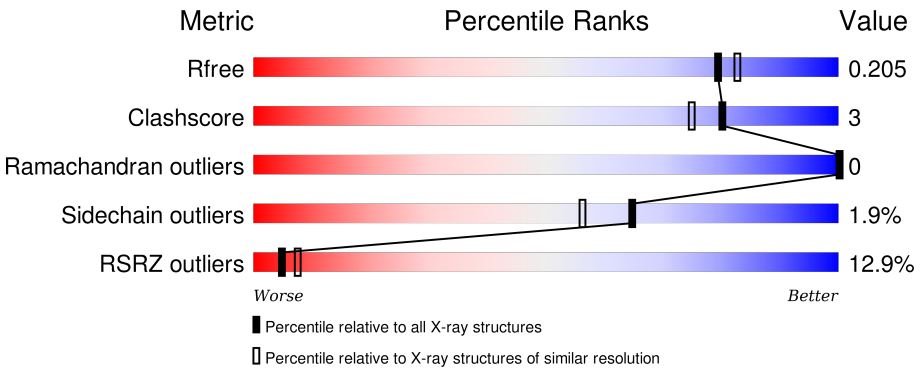

Metric	Whole archive (#Entries)	Similar resolution (#Entries, resolution range(Å))
R_{free}	91344	2910 (1.96-1.92)
Clashscore	102246	3095 (1.96-1.92)
Ramachandran outliers	100387	3062 (1.96-1.92)
Sidechain outliers	100360	3062 (1.96-1.92)
RSRZ outliers	91569	2915 (1.96-1.92)

The table below summarises the geometric issues observed across the polymeric chains and their fit to the electron density. The red, orange, yellow and green segments on the lower bar indicate the fraction of residues that contain outliers for >=3, 2, 1 and 0 types of geometric quality criteria. A grey segment represents the fraction of residues that are not modelled. The numeric value for each fraction is indicated below the corresponding segment, with a dot representing fractions <=5% The upper red bar (where present) indicates the fraction of residues that have poor fit to the electron density. The numeric value is given above the bar.

Mol	Chain	Length	Quality of chain
1	A	453	11% 84% 7% 8%
1	B	453	12% 85% 7% 8%

2 Entry composition (i)

There are 3 unique types of molecules in this entry. The entry contains 6414 atoms, of which 0 are hydrogens and 0 are deuteriums.

In the tables below, the ZeroOcc column contains the number of atoms modelled with zero occupancy, the AltConf column contains the number of residues with at least one atom in alternate conformation and the Trace column contains the number of residues modelled with at most 2 atoms.

- Molecule 1 is a protein called Peptidoglycan glycosyltransferase.

Mol	Chain	Residues	Atoms						ZeroOcc	AltConf	Trace
			Total	C	N	O	S	Se			
1	A	416	2996	1863	508	610	2	13	0	1	0
1	B	416	2996	1864	507	610	2	13	0	0	0

There are 6 discrepancies between the modelled and reference sequences:

Chain	Residue	Modelled	Actual	Comment	Reference
A	502	SER	-	EXPRESSION TAG	UNP C8W8H7
A	503	ASN	-	EXPRESSION TAG	UNP C8W8H7
A	504	ALA	-	EXPRESSION TAG	UNP C8W8H7
B	502	SER	-	EXPRESSION TAG	UNP C8W8H7
B	503	ASN	-	EXPRESSION TAG	UNP C8W8H7
B	504	ALA	-	EXPRESSION TAG	UNP C8W8H7

- Molecule 2 is (2R,4S)-2-[(1R)-2-HYDROXY-1-{[(2-HYDROXYNAPHTHALEN-1-YL)CARBONYL]AMINO}ETHYL]-5,5-DIMETHYL-1,3-THIAZOLIDINE-4-CARBOXYLIC ACID (three-letter code: NXU) (formula: $C_{19}H_{22}N_2O_5S$).

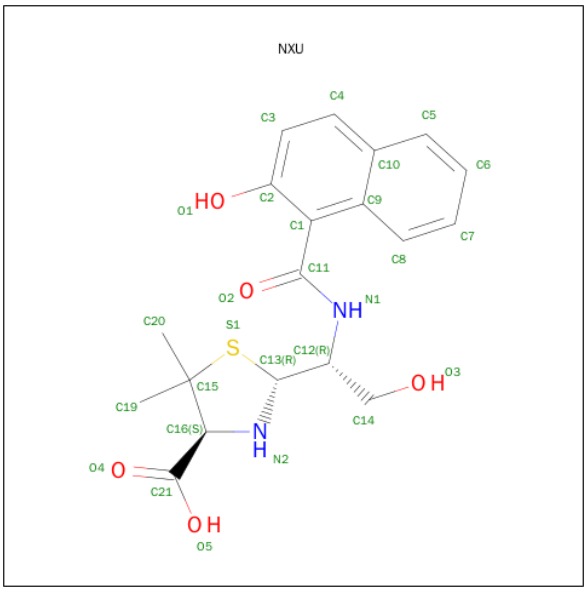

Mol	Chain	Residues	Atoms					ZeroOcc	AltConf
			Total	C	N	O	S		
2	A	1	27	19	2	5	1	0	0
			Total	C	N	O	S		
2	B	1	27	19	2	5	1	0	0

- Molecule 3 is water.

Mol	Chain	Residues	Atoms		ZeroOcc	AltConf
			Total	O		
3	A	195	195	195	0	0
			Total	O		
3	B	172	173	173	0	1

3 Residue-property plots (i)

These plots are drawn for all protein, RNA and DNA chains in the entry. The first graphic for a chain summarises the proportions of errors displayed in the second graphic. The second graphic shows the sequence view annotated by issues in geometry and electron density. Residues are color-coded according to the number of geometric quality criteria for which they contain at least one outlier: green = 0, yellow = 1, orange = 2 and red = 3 or more. A red dot above a residue indicates a poor fit to the electron density (RSRZ > 2). Stretches of 2 or more consecutive residues without any outlier are shown as a green connector. Residues present in the sample, but not in the model, are shown in grey.

- Molecule 1: Peptidoglycan glycosyltransferase

Chain A:

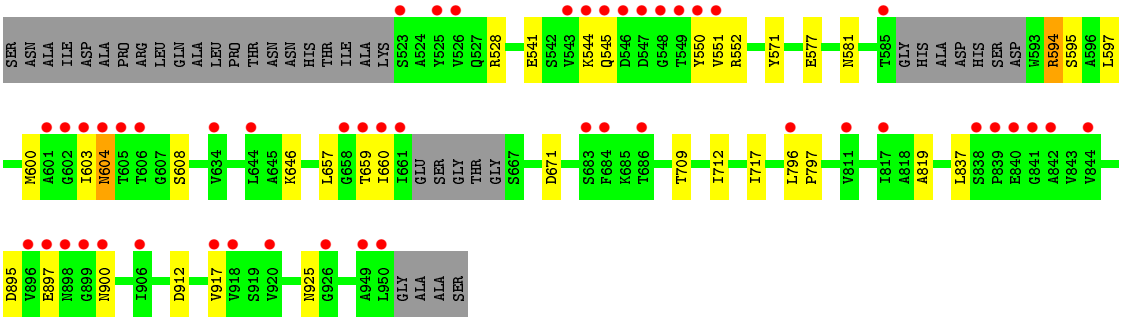

- Molecule 1: Peptidoglycan glycosyltransferase

Chain B:

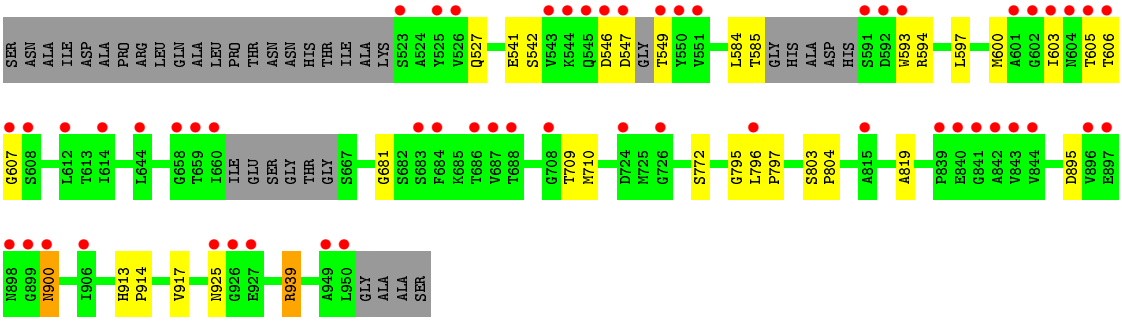

4 Data and refinement statistics (i)

Property	Value	Source
Space group	P 1 21 1	Depositor
Cell constants a, b, c, α, β, γ	68.40Å 70.06Å 114.57Å 90.00° 96.97° 90.00°	Depositor
Resolution (Å)	30.00 – 1.94 28.74 – 1.94	Depositor EDS
% Data completeness (in resolution range)	99.3 (30.00-1.94) 99.3 (28.74-1.94)	Depositor EDS
R_{merge}	0.07	Depositor
R_{sym}	(Not available)	Depositor
$< I/\sigma(I) >$ [1]	2.89 (at 1.93Å)	Xtriage
Refinement program	REFMAC 5.8.0069	Depositor
R, R_{free}	0.161 , 0.199 0.171 , 0.205	Depositor DCC
R_{free} test set	3980 reflections (5.28%)	DCC
Wilson B-factor (Å^2)	38.0	Xtriage
Anisotropy	0.219	Xtriage
Bulk solvent k_{sol}(e/Å^3), B_{sol}(Å^2)	0.35 , 57.9	EDS
Estimated twinning fraction	No twinning to report.	Xtriage
L-test for twinning[2]	$< \|L\| > = 0.48$, $< L^2 > = 0.31$	Xtriage
Outliers	0 of 79435 reflections	Xtriage
F_o,F_c correlation	0.97	EDS
Total number of atoms	6414	wwPDB-VP
Average B, all atoms (Å^2)	51.0	wwPDB-VP

Xtriage's analysis on translational NCS is as follows: *The largest off-origin peak in the Patterson function is 5.05% of the height of the origin peak. No significant pseudotranslation is detected.*

[1] Intensities estimated from amplitudes.

[2] Theoretical values of $< |L| >$, $< L^2 >$ for acentric reflections are 0.5, 0.375 respectively for untwinned datasets, and 0.333, 0.2 for perfectly twinned datasets.

5 Model quality (i)

5.1 Standard geometry (i)

Bond lengths and bond angles in the following residue types are not validated in this section: NXU

The Z score for a bond length (or angle) is the number of standard deviations the observed value is removed from the expected value. A bond length (or angle) with $|Z| > 5$ is considered an outlier worth inspection. RMSZ is the root-mean-square of all Z scores of the bond lengths (or angles).

Mol	Chain	Bond lengths		Bond angles	
		RMSZ	$\#\|Z\| >5$	RMSZ	$\#\|Z\| >5$
1	A	0.66	0/3034	0.77	1/4118 (0.0%)
1	B	0.68	0/3034	0.79	0/4118
All	All	0.67	0/6068	0.78	1/8236 (0.0%)

There are no bond length outliers.

All (1) bond angle outliers are listed below:

Mol	Chain	Res	Type	Atoms	Z	Observed(^{o})	Ideal(^{o})
1	A	604	ASN	N-CA-C	8.64	134.33	111.00

There are no chirality outliers.

There are no planarity outliers.

5.2 Too-close contacts (i)

In the following table, the Non-H and H(model) columns list the number of non-hydrogen atoms and hydrogen atoms in the chain respectively. The H(added) column lists the number of hydrogen atoms added and optimized by MolProbity. The Clashes column lists the number of clashes within the asymmetric unit, whereas Symm-Clashes lists symmetry related clashes.

Mol	Chain	Non-H	H(model)	H(added)	Clashes	Symm-Clashes
1	A	2996	0	2916	22	0
1	B	2996	0	2918	19	0
2	A	27	0	18	0	0
2	B	27	0	17	1	0
3	A	195	0	0	2	0
3	B	173	0	0	2	0
All	All	6414	0	5869	41	0

The all-atom clashscore is defined as the number of clashes found per 1000 atoms (including hydrogen atoms). The all-atom clashscore for this structure is 3.

The worst 5 of 41 close contacts within the same asymmetric unit are listed below, sorted by their clash magnitude.

Atom-1	Atom-2	Interatomic distance (Å)	Clash overlap (Å)
1:A:545:GLN:HE22	1:A:551:VAL:HB	1.41	0.86
1:A:608:SER:HB2	1:A:837:LEU:O	1.97	0.64
1:A:571:TYR:HE2	1:A:657:LEU:O	1.81	0.62
1:A:796:LEU:HD12	1:A:797:PRO:HD2	1.83	0.61
1:B:527:GLN:HG2	1:B:606:THR:HG23	1.83	0.61

There are no symmetry-related clashes.

5.3 Torsion angles (i)

5.3.1 Protein backbone (i)

In the following table, the Percentiles column shows the percent Ramachandran outliers of the chain as a percentile score with respect to all X-ray entries followed by that with respect to entries of similar resolution.

The Analysed column shows the number of residues for which the backbone conformation was analysed, and the total number of residues.

Mol	Chain	Analysed	Favoured	Allowed	Outliers	Percentiles	
1	A	411/453 (91%)	399 (97%)	12 (3%)	0	100	100
1	B	408/453 (90%)	396 (97%)	12 (3%)	0	100	100
All	All	819/906 (90%)	795 (97%)	24 (3%)	0	100	100

There are no Ramachandran outliers to report.

5.3.2 Protein sidechains (i)

In the following table, the Percentiles column shows the percent sidechain outliers of the chain as a percentile score with respect to all X-ray entries followed by that with respect to entries of similar resolution.

The Analysed column shows the number of residues for which the sidechain conformation was analysed, and the total number of residues.

Mol	Chain	Analysed	Rotameric	Outliers	Percentiles	
1	A	315/330 (96%)	311 (99%)	4 (1%)	76	71
1	B	316/330 (96%)	308 (98%)	8 (2%)	55	44
All	All	631/660 (96%)	619 (98%)	12 (2%)	65	56

5 of 12 residues with a non-rotameric sidechain are listed below:

Mol	Chain	Res	Type
1	B	585	THR
1	B	603	ILE
1	B	710	MSE
1	B	541	GLU
1	B	709	THR

Some sidechains can be flipped to improve hydrogen bonding and reduce clashes. 5 of 8 such sidechains are listed below:

Mol	Chain	Res	Type
1	A	943	GLN
1	B	722	ASN
1	B	545	GLN
1	A	925	ASN
1	B	527	GLN

5.3.3 RNA (i)

There are no RNA molecules in this entry.

5.4 Non-standard residues in protein, DNA, RNA chains (i)

There are no non-standard protein/DNA/RNA residues in this entry.

5.5 Carbohydrates (i)

There are no carbohydrates in this entry.

5.6 Ligand geometry (i)

2 ligands are modelled in this entry.

In the following table, the Counts columns list the number of bonds (or angles) for which Mogul statistics could be retrieved, the number of bonds (or angles) that are observed in the model and the number of bonds (or angles) that are defined in the chemical component dictionary. The Link column lists molecule types, if any, to which the group is linked. The Z score for a bond length (or angle) is the number of standard deviations the observed value is removed from the expected value. A bond length (or angle) with $|Z| > 2$ is considered an outlier worth inspection. RMSZ is the root-mean-square of all Z scores of the bond lengths (or angles).

Mol	Type	Chain	Res	Link	Bond lengths			Bond angles		
					Counts	RMSZ	$\#\|Z\| > 2$	Counts	RMSZ	$\#\|Z\| > 2$
2	NXU	A	1001	1	24,29,29	2.22	7 (29%)	31,43,43	3.60	13 (41%)
2	NXU	B	1001	1	24,29,29	2.17	6 (25%)	31,43,43	3.57	11 (35%)

In the following table, the Chirals column lists the number of chiral outliers, the number of chiral centers analysed, the number of these observed in the model and the number defined in the chemical component dictionary. Similar counts are reported in the Torsion and Rings columns. '-' means no outliers of that kind were identified.

Mol	Type	Chain	Res	Link	Chirals	Torsions	Rings
2	NXU	A	1001	1	-	0/10/33/33	0/3/3/3
2	NXU	B	1001	1	-	0/10/33/33	0/3/3/3

The worst 5 of 13 bond length outliers are listed below:

Mol	Chain	Res	Type	Atoms	Z	Observed(Å)	Ideal(Å)
2	B	1001	NXU	C16-N2	-5.76	1.41	1.46
2	A	1001	NXU	C15-C16	-5.53	1.44	1.56
2	B	1001	NXU	O3-C14	-3.48	1.27	1.42
2	A	1001	NXU	O3-C14	-3.05	1.29	1.42
2	B	1001	NXU	C20-C15	-2.74	1.45	1.53

The worst 5 of 24 bond angle outliers are listed below:

Mol	Chain	Res	Type	Atoms	Z	Observed(^{o})	Ideal(^{o})
2	B	1001	NXU	C19-C15-S1	-11.93	89.27	109.17
2	A	1001	NXU	C19-C15-S1	-11.03	90.78	109.17
2	A	1001	NXU	C20-C15-S1	-9.90	92.65	109.17
2	B	1001	NXU	C20-C15-S1	-7.74	96.27	109.17
2	B	1001	NXU	C16-C15-S1	-7.73	90.50	103.96

There are no chirality outliers.

There are no torsion outliers.

There are no ring outliers.

1 monomer is involved in 1 short contact:

Mol	Chain	Res	Type	Clashes	Symm-Clashes
2	B	1001	NXU	1	0

5.7 Other polymers (i)

There are no such residues in this entry.

5.8 Polymer linkage issues (i)

There are no chain breaks in this entry.

6 Fit of model and data (i)

6.1 Protein, DNA and RNA chains (i)

In the following table, the column labelled '#RSRZ> 2' contains the number (and percentage) of RSRZ outliers, followed by percent RSRZ outliers for the chain as percentile scores relative to all X-ray entries and entries of similar resolution. The OWAB column contains the minimum, median, 95th percentile and maximum values of the occupancy-weighted average B-factor per residue. The column labelled 'Q< 0.9' lists the number of (and percentage) of residues with an average occupancy less than 0.9.

Mol	Chain	Analysed	<RSRZ>	#RSRZ>2			OWAB(Å^2)	Q<0.9
1	A	403/453 (88%)	0.46	49 (12%)	5	9	31, 43, 95, 131	0
1	B	403/453 (88%)	0.47	55 (13%)	4	6	29, 46, 95, 125	0
All	All	806/906 (88%)	0.46	104 (12%)	5	7	29, 44, 95, 131	0

The worst 5 of 104 RSRZ outliers are listed below:

Mol	Chain	Res	Type	RSRZ
1	A	660	ILE	8.1
1	A	603	ILE	6.8
1	A	898	ASN	6.7
1	A	897	GLU	5.4
1	B	658	GLY	5.4

6.2 Non-standard residues in protein, DNA, RNA chains (i)

There are no non-standard protein/DNA/RNA residues in this entry.

6.3 Carbohydrates (i)

There are no carbohydrates in this entry.

6.4 Ligands (i)

In the following table, the Atoms column lists the number of modelled atoms in the group and the number defined in the chemical component dictionary. LLDF column lists the quality of electron density of the group with respect to its neighbouring residues in protein, DNA or RNA chains. The B-factors column lists the minimum, median, 95th percentile and maximum values of B factors of atoms in the group. The column labelled 'Q< 0.9' lists the number of atoms with occupancy less than 0.9.

Mol	Type	Chain	Res	Atoms	RSCC	RSR	LLDF	B-factors(Å^2)	Q<0.9
2	NXU	A	1001	27/27	0.89	0.18	1.28	39,55,78,83	0
2	NXU	B	1001	27/27	0.87	0.17	0.76	46,66,87,93	0

6.5 Other polymers (i)

There are no such residues in this entry.