Full wwPDB X-ray Structure Validation Report (i)

Oct 24, 2016 – 07:51 PM EDT

PDB ID	:	5T6I
Title	:	CRYSTAL STRUCTURE OF TGCDPK1 FROM TOXOPLASMA GONDII COMPLEXED WITH 5GB
Authors	:	Jiang, D.Q.; Tempel, W.; Walker, J.R.; El Bakkouri, M.; Loppnau, P.; Graslund, S.; Arrowsmith, C.H.; Edwards, A.M.; Bountra, C.; Hui, R.; Lovato, D.V.; Osman, K.T.; Structural Genomics Consortium (SGC)
Deposited on	:	2016-09-01
Resolution	:	2.05 Å(reported)

This is a Full wwPDB X-ray Structure Validation Report for a publicly released PDB entry.

We welcome your comments at *validation@mail.wwpdb.org*
A user guide is available at
http://wwpdb.org/validation/2016/XrayValidationReportHelp
with specific help available everywhere you see the (i) symbol.

The following versions of software and data (see references (1)) were used in the production of this report:

MolProbity	:	4.02b-467
Mogul	:	1.7.1 (RC1), CSD as537be (2016)
Xtriage (Phenix)	:	1.9-1692
EDS	:	rb-20027939
Percentile statistics	:	20151230.v01 (using entries in the PDB archive December 30th 2015)
Refmac	:	5.8.0135
CCP4	:	6.5.0
Ideal geometry (proteins)	:	Engh & Huber (2001)
Ideal geometry (DNA, RNA)	:	Parkinson et al. (1996)
Validation Pipeline (wwPDB-VP)	:	rb-20027939

1 Overall quality at a glance (i)

The following experimental techniques were used to determine the structure:
X-RAY DIFFRACTION

The reported resolution of this entry is 2.05 Å.

Percentile scores (ranging between 0-100) for global validation metrics of the entry are shown in the following graphic. The table shows the number of entries on which the scores are based.

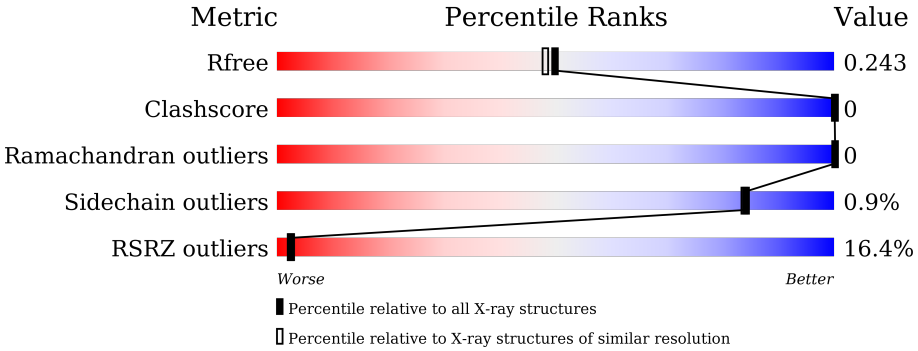

Metric	Whole archive (#Entries)	Similar resolution (#Entries, resolution range(Å))
R_{free}	91344	1192 (2.04-2.04)
Clashscore	102246	1269 (2.04-2.04)
Ramachandran outliers	100387	1258 (2.04-2.04)
Sidechain outliers	100360	1258 (2.04-2.04)
RSRZ outliers	91569	1194 (2.04-2.04)

The table below summarises the geometric issues observed across the polymeric chains and their fit to the electron density. The red, orange, yellow and green segments on the lower bar indicate the fraction of residues that contain outliers for >=3, 2, 1 and 0 types of geometric quality criteria. A grey segment represents the fraction of residues that are not modelled. The numeric value for each fraction is indicated below the corresponding segment, with a dot representing fractions <=5% The upper red bar (where present) indicates the fraction of residues that have poor fit to the electron density. The numeric value is given above the bar.

Mol	Chain	Length	Quality of chain
1	A	525	13% 81% • 19%

2 Entry composition (i)

There are 3 unique types of molecules in this entry. The entry contains 3476 atoms, of which 0 are hydrogens and 0 are deuteriums.

In the tables below, the ZeroOcc column contains the number of atoms modelled with zero occupancy, the AltConf column contains the number of residues with at least one atom in alternate conformation and the Trace column contains the number of residues modelled with at most 2 atoms.

- Molecule 1 is a protein called Calmodulin-domain protein kinase 1.

Mol	Chain	Residues	Atoms					ZeroOcc	AltConf	Trace
			Total	C	N	O	S			
1	A	427	3334	2131	562	626	15	0	7	0

There are 18 discrepancies between the modelled and reference sequences:

Chain	Residue	Modelled	Actual	Comment	Reference
A	-17	MET	-	expression tag	UNP Q9BJF5
A	-16	HIS	-	expression tag	UNP Q9BJF5
A	-15	HIS	-	expression tag	UNP Q9BJF5
A	-14	HIS	-	expression tag	UNP Q9BJF5
A	-13	HIS	-	expression tag	UNP Q9BJF5
A	-12	HIS	-	expression tag	UNP Q9BJF5
A	-11	HIS	-	expression tag	UNP Q9BJF5
A	-10	SER	-	expression tag	UNP Q9BJF5
A	-9	SER	-	expression tag	UNP Q9BJF5
A	-8	GLY	-	expression tag	UNP Q9BJF5
A	-7	ARG	-	expression tag	UNP Q9BJF5
A	-6	GLU	-	expression tag	UNP Q9BJF5
A	-5	ASN	-	expression tag	UNP Q9BJF5
A	-4	LEU	-	expression tag	UNP Q9BJF5
A	-3	TYR	-	expression tag	UNP Q9BJF5
A	-2	PHE	-	expression tag	UNP Q9BJF5
A	-1	GLN	-	expression tag	UNP Q9BJF5
A	0	GLY	-	expression tag	UNP Q9BJF5

- Molecule 2 is 4-(3-methylphenyl)-5-(1,5-naphthyridin-2-yl)-1,3-thiazol-2-amine (three-letter code: 5GB) (formula: $C_{18}H_{14}N_4S$).

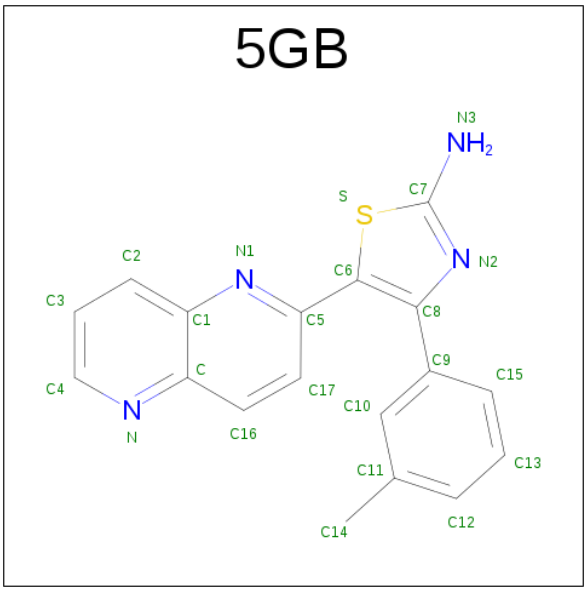

Mol	Chain	Residues	Atoms				ZeroOcc	AltConf
			Total	C	N	S		
2	A	1	23	18	4	1	0	0

- Molecule 3 is water.

Mol	Chain	Residues	Atoms		ZeroOcc	AltConf
			Total	O		
3	A	113	119	119	0	6

3 Residue-property plots (i)

These plots are drawn for all protein, RNA and DNA chains in the entry. The first graphic for a chain summarises the proportions of errors displayed in the second graphic. The second graphic shows the sequence view annotated by issues in geometry and electron density. Residues are color-coded according to the number of geometric quality criteria for which they contain at least one outlier: green = 0, yellow = 1, orange = 2 and red = 3 or more. A red dot above a residue indicates a poor fit to the electron density (RSRZ > 2). Stretches of 2 or more consecutive residues without any outlier are shown as a green connector. Residues present in the sample, but not in the model, are shown in grey.

- Molecule 1: Calmodulin-domain protein kinase 1

Chain A:

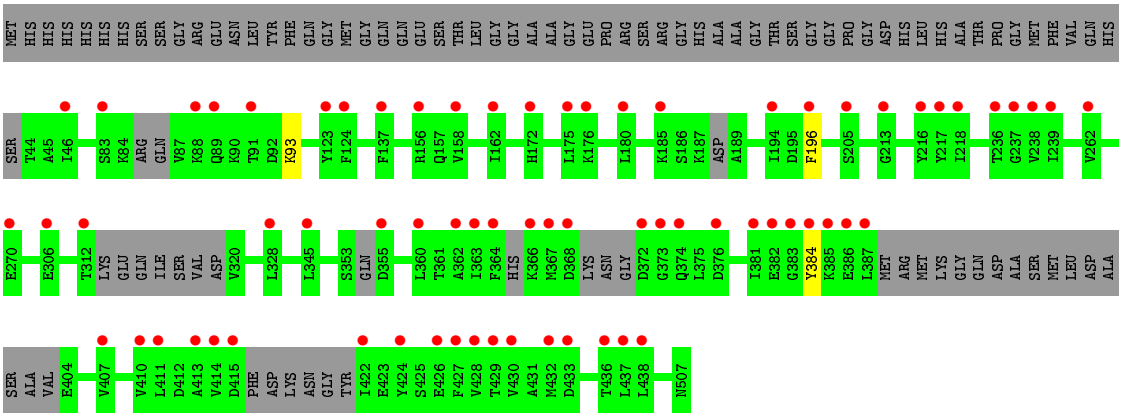

4 Data and refinement statistics (i)

Property	Value	Source
Space group	P 1 21 1	Depositor
Cell constants a, b, c, α, β, γ	48.07Å 72.48Å 66.00Å 90.00° 97.42° 90.00°	Depositor
Resolution (Å)	31.71 – 2.05 31.71 – 2.05	Depositor EDS
% Data completeness (in resolution range)	98.4 (31.71-2.05) 98.5 (31.71-2.05)	Depositor EDS
R_{merge}	0.05	Depositor
R_{sym}	(Not available)	Depositor
$< I/\sigma(I) >$ [1]	1.14 (at 2.05Å)	Xtriage
Refinement program	BUSTER 2.10.2	Depositor
R, R_{free}	0.199 , 0.225 0.210 , 0.243	Depositor DCC
R_{free} test set	1377 reflections (5.20%)	DCC
Wilson B-factor (Å^2)	45.5	Xtriage
Anisotropy	0.419	Xtriage
Bulk solvent k_{sol}(e/Å^3), B_{sol}(Å^2)	0.35 , 70.0	EDS
L-test for twinning[2]	$< \|L\| > = 0.48$, $< L^2 > = 0.31$	Xtriage
Estimated twinning fraction	No twinning to report.	Xtriage
F_o,F_c correlation	0.95	EDS
Total number of atoms	3476	wwPDB-VP
Average B, all atoms (Å^2)	66.0	wwPDB-VP

Xtriage's analysis on translational NCS is as follows: *The largest off-origin peak in the Patterson function is 5.43% of the height of the origin peak. No significant pseudotranslation is detected.*

[1] Intensities estimated from amplitudes.

[2] Theoretical values of $< |L| >$, $< L^2 >$ for acentric reflections are 0.5, 0.333 respectively for untwinned datasets, and 0.375, 0.2 for perfectly twinned datasets.

5 Model quality (i)

5.1 Standard geometry (i)

Bond lengths and bond angles in the following residue types are not validated in this section: 5GB

The Z score for a bond length (or angle) is the number of standard deviations the observed value is removed from the expected value. A bond length (or angle) with $|Z| > 5$ is considered an outlier worth inspection. RMSZ is the root-mean-square of all Z scores of the bond lengths (or angles).

Mol	Chain	Bond lengths		Bond angles	
		RMSZ	$\#\|Z\| >5$	RMSZ	$\#\|Z\| >5$
1	A	0.40	0/3386	0.53	0/4568

There are no bond length outliers.

There are no bond angle outliers.

There are no chirality outliers.

There are no planarity outliers.

5.2 Too-close contacts (i)

In the following table, the Non-H and H(model) columns list the number of non-hydrogen atoms and hydrogen atoms in the chain respectively. The H(added) column lists the number of hydrogen atoms added and optimized by MolProbity. The Clashes column lists the number of clashes within the asymmetric unit, whereas Symm-Clashes lists symmetry related clashes.

Mol	Chain	Non-H	H(model)	H(added)	Clashes	Symm-Clashes
1	A	3334	0	3174	0	0
2	A	23	0	14	0	0
3	A	119	0	0	0	0
All	All	3476	0	3188	0	0

The all-atom clashscore is defined as the number of clashes found per 1000 atoms (including hydrogen atoms). The all-atom clashscore for this structure is 0.

There are no clashes within the asymmetric unit.

There are no symmetry-related clashes.

5.3 Torsion angles (i)

5.3.1 Protein backbone (i)

In the following table, the Percentiles column shows the percent Ramachandran outliers of the chain as a percentile score with respect to all X-ray entries followed by that with respect to entries of similar resolution.

The Analysed column shows the number of residues for which the backbone conformation was analysed, and the total number of residues.

Mol	Chain	Analysed	Favoured	Allowed	Outliers	Percentiles
1	A	416/525 (79%)	411 (99%)	5 (1%)	0	100 100

There are no Ramachandran outliers to report.

5.3.2 Protein sidechains (i)

In the following table, the Percentiles column shows the percent sidechain outliers of the chain as a percentile score with respect to all X-ray entries followed by that with respect to entries of similar resolution.

The Analysed column shows the number of residues for which the sidechain conformation was analysed, and the total number of residues.

Mol	Chain	Analysed	Rotameric	Outliers	Percentiles
1	A	330/455 (72%)	327 (99%)	3 (1%)	84 84

All (3) residues with a non-rotameric sidechain are listed below:

Mol	Chain	Res	Type
1	A	93	LYS
1	A	196	PHE
1	A	384	TYR

Some sidechains can be flipped to improve hydrogen bonding and reduce clashes. There are no such sidechains identified.

5.3.3 RNA (i)

There are no RNA molecules in this entry.

5.4 Non-standard residues in protein, DNA, RNA chains (i)

There are no non-standard protein/DNA/RNA residues in this entry.

5.5 Carbohydrates (i)

There are no carbohydrates in this entry.

5.6 Ligand geometry (i)

1 ligand is modelled in this entry.

In the following table, the Counts columns list the number of bonds (or angles) for which Mogul statistics could be retrieved, the number of bonds (or angles) that are observed in the model and the number of bonds (or angles) that are defined in the chemical component dictionary. The Link column lists molecule types, if any, to which the group is linked. The Z score for a bond length (or angle) is the number of standard deviations the observed value is removed from the expected value. A bond length (or angle) with $|Z| > 2$ is considered an outlier worth inspection. RMSZ is the root-mean-square of all Z scores of the bond lengths (or angles).

Mol	Type	Chain	Res	Link	Bond lengths			Bond angles		
					Counts	RMSZ	$\#\|Z\| > 2$	Counts	RMSZ	$\#\|Z\| > 2$
2	5GB	A	1000	-	22,26,26	0.38	0	27,37,37	0.93	2 (7%)

In the following table, the Chirals column lists the number of chiral outliers, the number of chiral centers analysed, the number of these observed in the model and the number defined in the chemical component dictionary. Similar counts are reported in the Torsion and Rings columns. '-' means no outliers of that kind were identified.

Mol	Type	Chain	Res	Link	Chirals	Torsions	Rings
2	5GB	A	1000	-	-	0/4/8/8	0/4/4/4

There are no bond length outliers.

All (2) bond angle outliers are listed below:

Mol	Chain	Res	Type	Atoms	Z	Observed(^{o})	Ideal(^{o})
2	A	1000	5GB	C6-C5-N1	-3.48	112.48	116.58
2	A	1000	5GB	C17-C5-C6	2.07	123.24	120.63

There are no chirality outliers.

There are no torsion outliers.

There are no ring outliers.

No monomer is involved in short contacts.

5.7 Other polymers (i)

There are no such residues in this entry.

5.8 Polymer linkage issues (i)

There are no chain breaks in this entry.

6 Fit of model and data (i)

6.1 Protein, DNA and RNA chains (i)

In the following table, the column labelled '#RSRZ> 2' contains the number (and percentage) of RSRZ outliers, followed by percent RSRZ outliers for the chain as percentile scores relative to all X-ray entries and entries of similar resolution. The OWAB column contains the minimum, median, 95th percentile and maximum values of the occupancy-weighted average B-factor per residue. The column labelled 'Q< 0.9' lists the number of (and percentage) of residues with an average occupancy less than 0.9.

Mol	Chain	Analysed	<RSRZ>	#RSRZ>2	OWAB(Å^2)	Q<0.9
1	A	427/525 (81%)	0.80	70 (16%) 2 2	38, 62, 104, 145	0

All (70) RSRZ outliers are listed below:

Mol	Chain	Res	Type	RSRZ
1	A	363	ILE	8.1
1	A	373	GLY	8.0
1	A	414	VAL	7.6
1	A	387	LEU	6.9
1	A	429	THR	6.4
1	A	422	ILE	6.4
1	A	362	ALA	5.7
1	A	367	MET	5.3
1	A	383	GLY	4.8
1	A	424	TYR	4.5
1	A	175	LEU	4.4
1	A	428	VAL	4.4
1	A	427	PHE	4.2
1	A	374	GLN	4.1
1	A	372	ASP	4.1
1	A	368	ASP	4.0
1	A	381	ILE	3.8
1	A	436	THR	3.8
1	A	360	LEU	3.8
1	A	386	GLU	3.7
1	A	239	ILE	3.6
1	A	385	LYS	3.5
1	A	217	TYR	3.5
1	A	411	LEU	3.2
1	A	413	ALA	3.2
1	A	366	LYS	3.2
1	A	89	GLN	3.1

Continued on next page...

Continued from previous page...

Mol	Chain	Res	Type	RSRZ
1	A	123	TYR	3.1
1	A	83	SER	3.1
1	A	205	SER	3.0
1	A	415	ASP	3.0
1	A	364	PHE	3.0
1	A	306	GLU	3.0
1	A	238	VAL	2.9
1	A	410	VAL	2.9
1	A	432	MET	2.9
1	A	426	GLU	2.9
1	A	407	VAL	2.9
1	A	158	VAL	2.8
1	A	270	GLU	2.8
1	A	180	LEU	2.8
1	A	437	LEU	2.7
1	A	194	ILE	2.7
1	A	185	LYS	2.6
1	A	218	ILE	2.6
1	A	196	PHE	2.6
1	A	216	TYR	2.5
1	A	91	THR	2.5
1	A	376	ASP	2.5
1	A	237	GLY	2.5
1	A	262	VAL	2.4
1	A	382	GLU	2.4
1	A	46	ILE	2.4
1	A	88	LYS	2.3
1	A	176	LYS	2.3
1	A	345[A]	LEU	2.3
1	A	312	THR	2.3
1	A	124	PHE	2.3
1	A	172	HIS	2.3
1	A	433	ASP	2.3
1	A	328	LEU	2.2
1	A	384	TYR	2.2
1	A	430	VAL	2.2
1	A	236	THR	2.2
1	A	137	PHE	2.2
1	A	438	LEU	2.1
1	A	162	ILE	2.0
1	A	213	GLY	2.0
1	A	156[A]	ARG	2.0

Continued on next page...

Continued from previous page...

Mol	Chain	Res	Type	RSRZ
1	A	355	ASP	2.0

6.2 Non-standard residues in protein, DNA, RNA chains (i)

There are no non-standard protein/DNA/RNA residues in this entry.

6.3 Carbohydrates (i)

There are no carbohydrates in this entry.

6.4 Ligands (i)

In the following table, the Atoms column lists the number of modelled atoms in the group and the number defined in the chemical component dictionary. LLDF column lists the quality of electron density of the group with respect to its neighbouring residues in protein, DNA or RNA chains. The B-factors column lists the minimum, median, 95th percentile and maximum values of B factors of atoms in the group. The column labelled 'Q< 0.9' lists the number of atoms with occupancy less than 0.9.

Mol	Type	Chain	Res	Atoms	RSCC	RSR	LLDF	B-factors(Å^2)	Q<0.9
2	5GB	A	1000	23/23	0.89	0.14	-0.10	55,58,61,63	0

6.5 Other polymers (i)

There are no such residues in this entry.